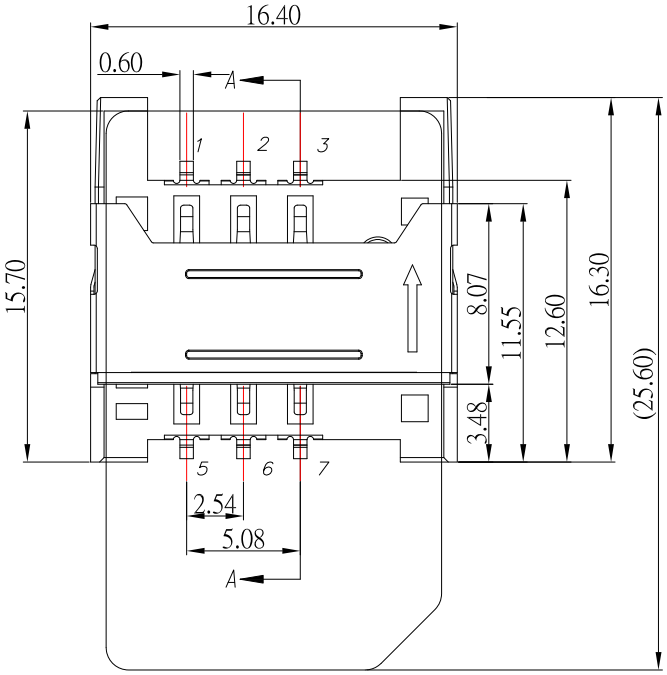

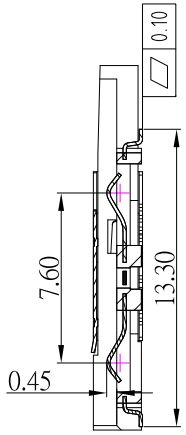

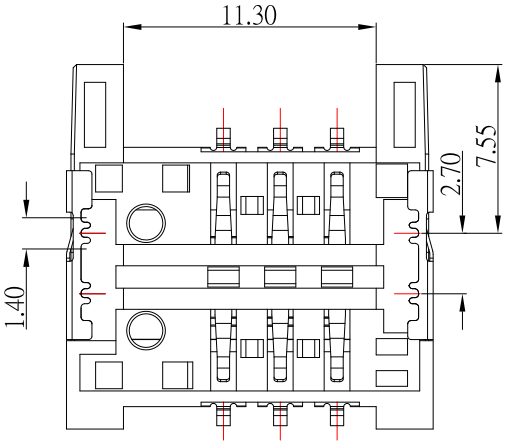

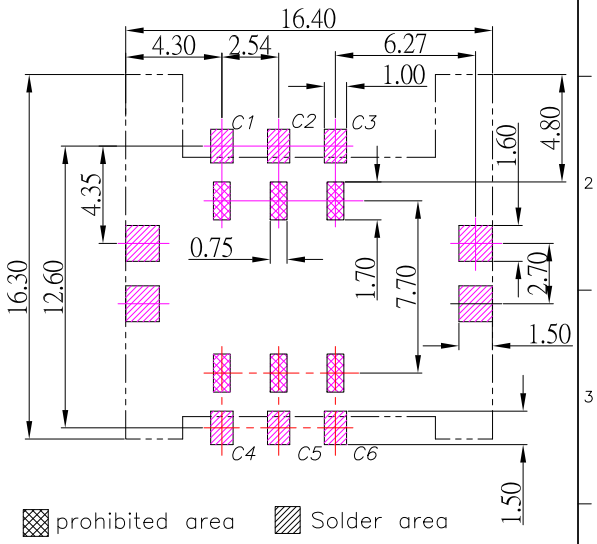

P.C.B LAYOUT
TOP VIEW

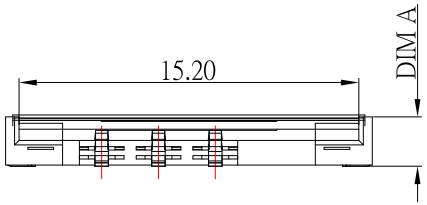

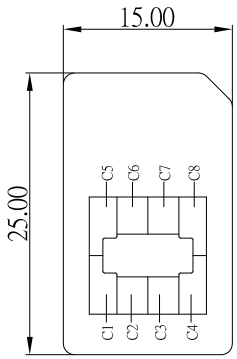

PART NO	DIM A
SIM-214H-18	1.8mm
SIM-214H-22	2.2mm

PIN NO	PIN NAME
C1	VCC
C2	RST
C3	CLK
C5	GND
C6	VPP
C7	I/O

SPECIFICATION

Material :

1. Housing: High-Thermoplastic, Black
2. Terminal: Copper Alloy
3. Shell: Copper Alloy

Finish:

1.Terminal: Plated Gold in Mating Area ;
Tin Plated on Solder Balls ;
Nickel under plated overall

2.Shell: Nickel under Plated surface layer

ITEM NO.	DESCRIPTION	DRAWN	DATE

东莞市高迪电子有限公司
Dong Guan KDRR Electronic Switch JacK Co., Ltd.

TOLERANCE UNLESS OTHERWISE STATED : Up to 5 ±0.2; Above 5 ~ 15 ±0.3; Above 15 ~ 30 ±0.4; Above 30 ~ 50 ±0.5; Angle ±0.3°

3RD. ANGEL'S

UNITS MM

DRAWN BY: Jack Lu	DATE 09/25/18	MAT'L		TITLE	CONNECTOR		
CHECKED BY: Jacky Chen	DATE 09/25/18	FINISH		MODLE	SIM Card 側推		
APPROVED BY: Tony Kao	DATE 09/25/18	SCALE	1 : 1	DWG NO.	SIM-214H-x-S267	SIZE	A4
		SHEET NO.	1 of 1	PART NO.	SIM-214H-x-S267	VER	R