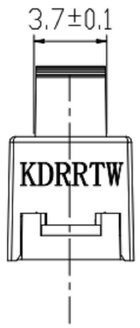

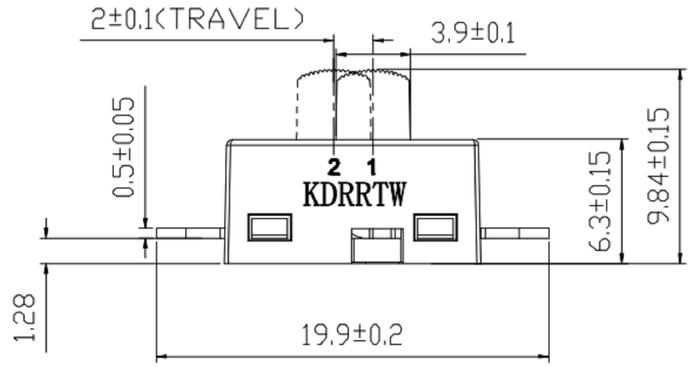

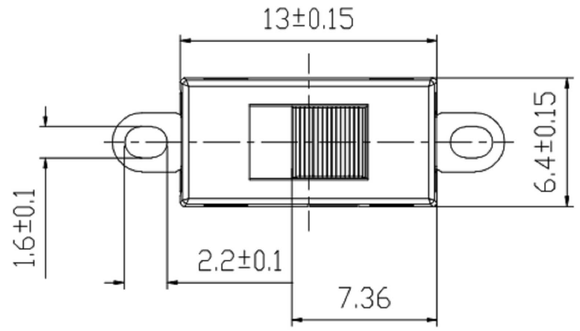

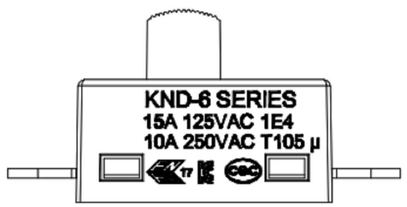

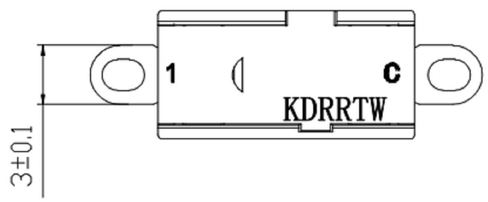

1.滑动开关型号 SLIDE SWITCH MODEL: KND-6 SERIES
开关编号MODEL NO.：KND-6-ABS-R2(2803)
2.焊线端子 SOLDER CONNECTOR TYPE
单刀单掷 SINGLE POLE SINGLE THROW
3.额定值 RATING: 15A 125/250VAC T105 μ 1E4 （CQC;ENEC17;NEMKO;KC）
10A 125/250VAC T105 μ 1E4 （CQC;ENEC17;NEMKO;KC）
5A 125/250VAC T105 μ 1E4 （CQC;ENEC17;NEMKO;KC）
4.接触电阻 CONTACT RESISTANCE: <50mΩ (INITIAL)
5.绝缘电阻 INSULATION RESISTANCE: ≥100MΩ(DC500V/1MIN)
6.介电强度 DIELECTRIC STRENGTH: 1500V /5mA /1MIN
7.机械寿命 MECHANICAL LIFE: >50000 CYCLES
8.电气寿命 ELECTRICAL LIFE: >10000 CYCLES
9.端子手工焊接条件 SOLDER ABILITY OF TERMINAL: MAX260°C, 3S
10.操作力 OPERATION FORCE:350±150gf
11.所有部件均使用环保材料 ALL MATERIALS ARE RoHS COMPLIANT

线 路 图
CIRCUIT DIAGRAM

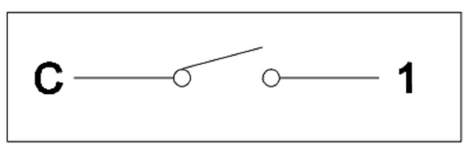

电流电路
CURRENT CIRCUIT

CIRCUIT:

位置POSITION	电路CIRCUIT
1	OFF
2	ON

NO.	PARTS	MATERIALS	QTY	FINISH
5	CONTACT CLIP	PBS STRIP	1	Ag PLATED
4	TERMINAL	BRASS	3	Ag PLATED
3	BASE	PHENOLIC RESIN	1	NATURAL
2	FRAME	STEEL STRIP	1	Ni PLATED
1	KNOB	POM	1	BLACK

ITEM NO.	DESCRIPTION	DRAWN	DATE
2	新增SPEC	Jack	111914
1	新增尺寸	Jack	061614

東莞市高迪電子有限公司
DONG GUAN GAO DI ELECTRONICS CO., LTD

TOLERANCE UNLESS OTHERWISE STATED: Up to 5 ±0.2; Above 5 ~ 15 ±0.3; Above 15 ~ 30 ±0.4; Above 30 ~ 50 ±0.5; Angle ±0.3°

3RD. ANGEL'S | UNITS MM

DRAWN BY: Ming Ming Zou	DATE 11/19/14	MAT'L	
CHECKED BY: Ning Ning Su	DATE 11/19/14	FINISH	
APPROVED BY: Jia Xiang	DATE 11/19/14	SCALE	1 : 1
		SHEET NO.	1 of 1

TITLE	SWITCH
MODLE	SLIDE SWITCH
DWG NO.	GD-KND-6-ABS-R2
PART NO.	
SIZE	A4
VER	R2