MRUSB-5BED14Bx-S347

SHELL鍍層:

TN
NI

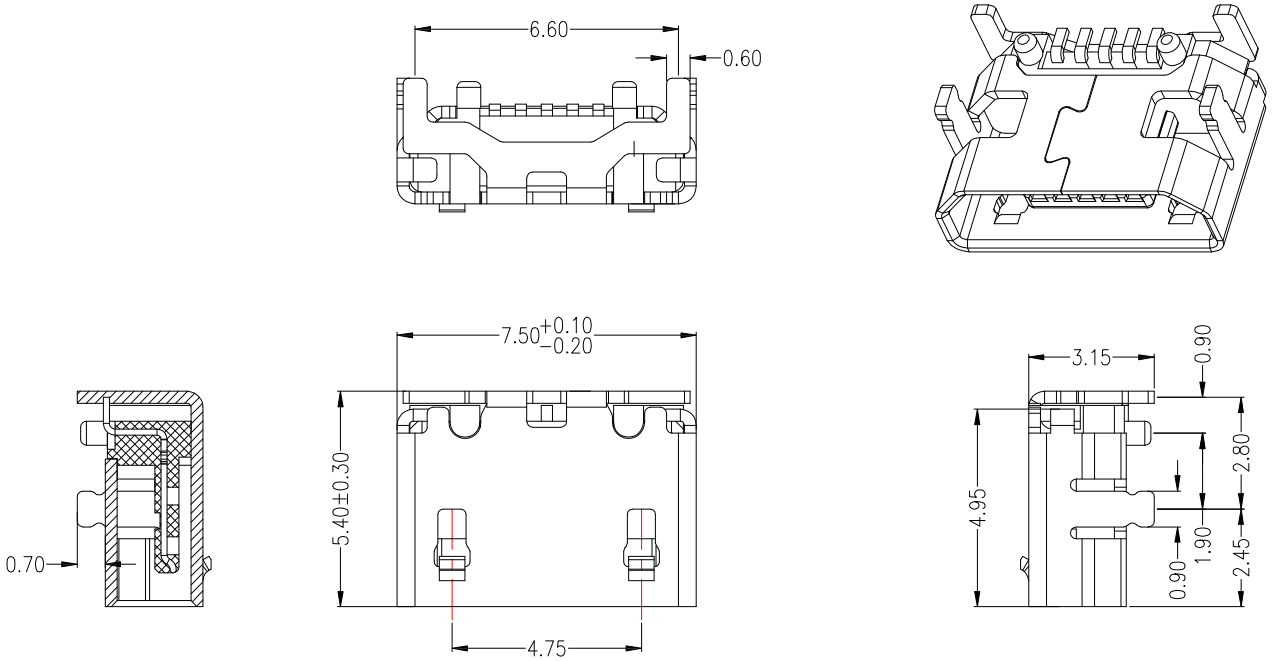

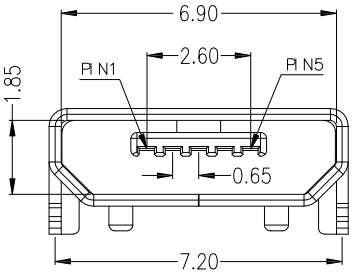

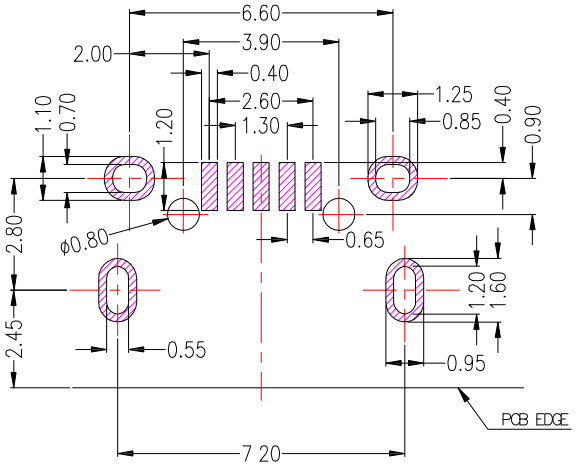

P.C.B LAYOUT MOUNTING PATTERN

NOTES:

1.MATERIAL:

1.1 HOUSING: LCP

1.2 CONTACT: PHOSPHOR BRONZE

1.3 SHELL: SUS

2.Finish:

2.1 Contact: Plated Gold in Mating Area ;
Gold Plated on Solder Balls ;
Nickel under plated overall

2.2 Shell: Tin or Nickel under Plated surface layer

3.SPECIFICATION:

3.1 CURRENT RATING: 1.8 A (PIN1,5) ; 1.0 A(PIN2,3,4)

3.2 DIELECTRIC WITHSSTANDING VOLTAGE: 100 V(ac) FOR 1min

3.3 CONTACT RESISTANCE: 30 mΩ MAX.

3.4 INSULATION RESISTANCE: 100 MΩ MIN.

3.5 TOTAL MATING FORCE: 3.57 Kgf MAX.

3.6 TOTAL UNMATING FORCE: 1.0 Kgf MIN.

3.7 TEMPERATURE RANGE: -30°C ~ +80°C

ITEM NO.	DESCRIPTION	DRAWN	DATE

东莞市高迪电子有限公司
Dong Guan KDRR Electronic Switch JacK Co., Ltd.

TOLERANCE UNLESS OTHERWISE STATED :
Up to 5 ±0.2
Above 5 ~ 15 ±0.3
Above 15 ~ 30 ±0.4
Above 30 ~ 50 ±0.5
Angle ±0.3°

3RD. ANGEL'S | UNITS | MM

DRAWN BY: Jack Lu	DATE 08/02/18	MAT'L		TITLE	CONNECTOR		
CHECKED BY: Jacky Chen	DATE 08/02/18	FINISH		MODLE	MICRO USB 5BF 牛角(PH7.2-6.6) 有柱,無捲邊		
APPROVED BY: Tony Kao	DATE 08/02/18	SCALE	1 : 1	DWG NO.	MRUSB5B-ED14Bx-S347	SIZE	A4
		SHEET NO.	1 of 1	PART NO.	MRUSB5B-ED14Bx-S347	VER	R