SBC-160S1B-20x-S412

鍍層厚度 :

Blank : 1u"
2 : 15u"
3 : 30u"

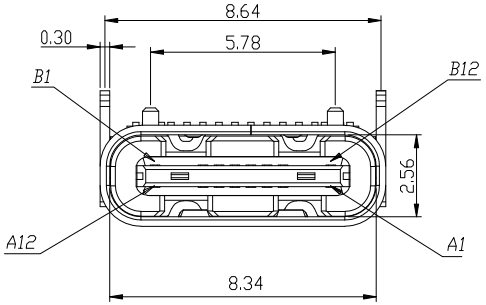

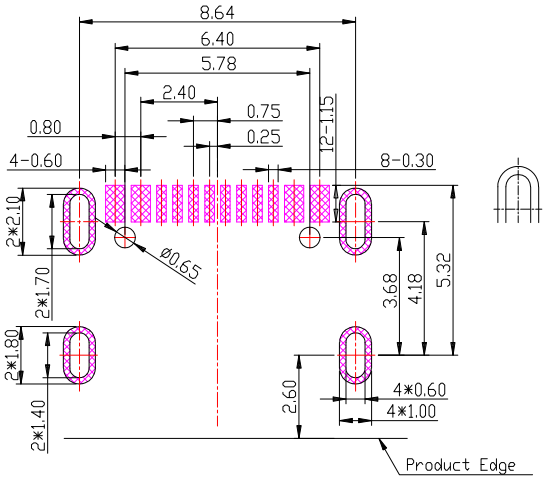

RECOMMENDED P.C.B. LAYOUT

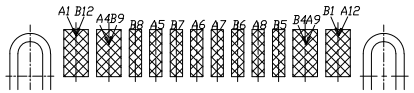

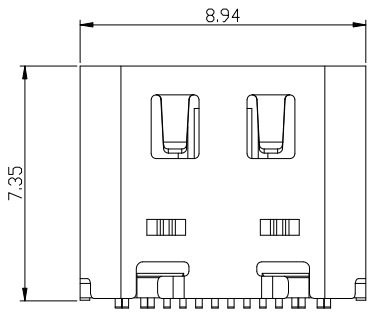

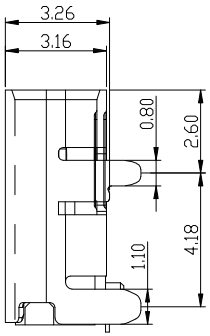

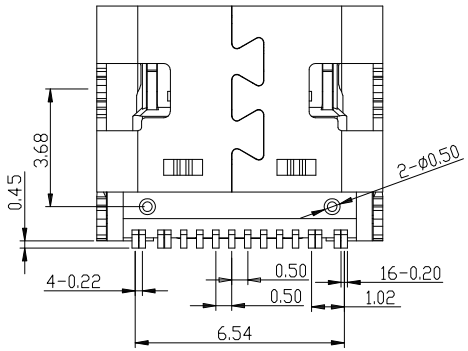

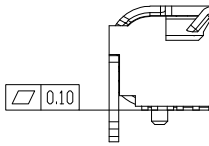

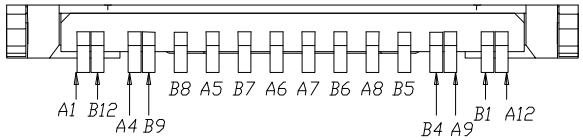

PIN	SIGNAL NAME	PIN	SIGNAL NAME
A1	GND	B12	GND
A4	VBUS	B9	VBUS
A5	CC1	B8	SBU2
A6	DP1	B7	DN2
A7	DN1	B6	DP2
A8	SBU1	B5	CC2
A9	VBUS	B4	VBUS
A12	GND	B1	GND

SPECIFICATIONS

Electrical:

1.Dielectric Withstand Voltage: 100V AC

2.Contact Resistance: 30 mΩ Max

3.Insulation Resistance: 100 MΩ Min

Material:

1.Housing: LCP

2.Contact: Copper Alloy

3.Shell: SUS

Finish:

1.Contact: Plated Gold in Mating Area ;
Gold Plated on Solder Balls ;
Nickel under plated overall

2.Shell: Nickel under Plated surface layer

ITEM NO.	DESCRIPTION	DRAWN	DATE
2	更新尺寸	Jack	052020
1	更新樣式	Jack	100119

东莞市高迪电子有限公司
Dong Guan KDRR Electronic Switch JacK Co., Ltd.

TOLERANCE UNLESS OTHERWISE STATED : Up to 5 ±0.2; Above 5 ~ 15 ±0.3; Above 15 ~ 30 ±0.4; Above 30 ~ 50 ±0.5; Angle ±0.3°

3RD. ANGEL'S | UNITS MM

DRAWN BY: Jack Lu	DATE 05/20/20	MAT'L	
CHECKED BY: Jacky Chen	DATE 05/20/20	FINISH	
APPROVED BY: Tony Kao	DATE 05/20/20	SCALE 1 : 1	SHEET NO. 1 of 1

TITLE	CONNECTOR
MODLE	USB TYPE C 2.0 板上型帶彈片
DWG NO.	SBC-160S1B-20x-S412
PART NO.	SBC-160S1B-20x-S412
SIZE	A4
VER	R2