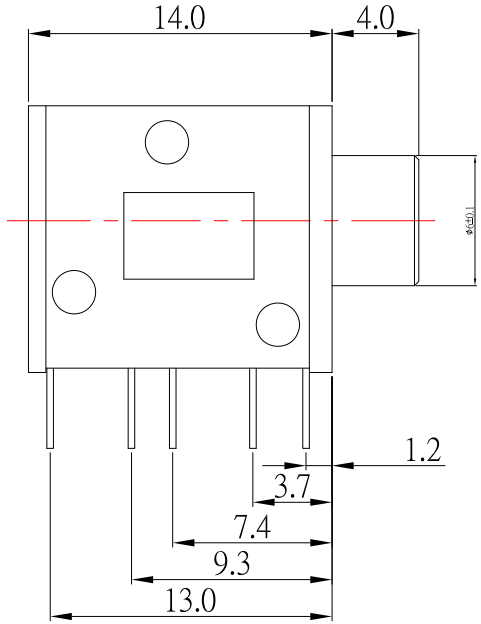

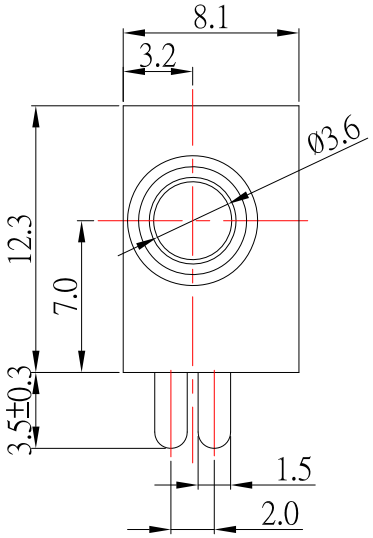

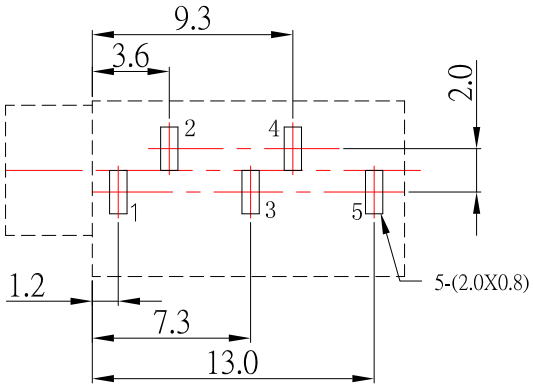

P.C.B LAYOUT
TOP VIEW

PJ-364x-x-S124

COLOR
Black: Blank
PINK : PI
Green : GR
Blue : BL

SCHEMATIC

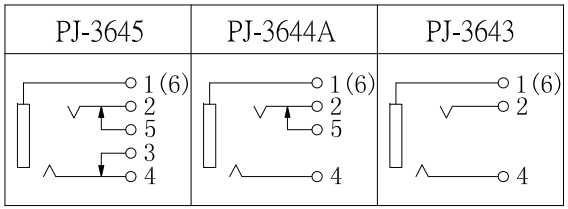

SPECIFICATION

1.Rating ：DC 30V 0.5A；

2.Contact resistance：≤0.03Ω；

3.Insulation resistance：≥100MΩ；

4.Withstand voltage：500VAC；

5.Insertion and extraction force：3-30N;

6.life test：5,000 cycles。

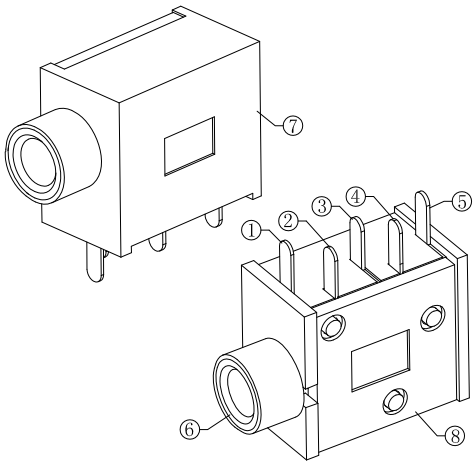

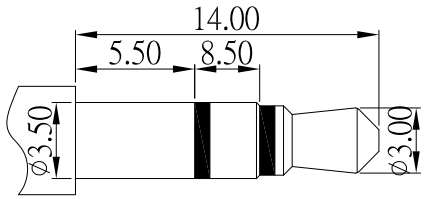

Ø3.50mm 3 POLE PLUG

NO.	DESCRIPTION	QTY	MATERIAL	PLATING
8	COVER	1	PBT	
7	HOUSING	1	PBT	
6	AXIS SUPPORT	1	BRASS	Ni-Plating
5	CURVE PIECE	1	BRASS	Sn-Plating
4	SPRING PIECE	1	PHOSPHOR BRONZE	Sn-Plating
3	CURVE PIECE	1	BRASS	Sn-Plating
2	SPRING PIECE	1	PHOSPHOR BRONZE	Sn-Plating
1	FLAT PIECE	1	BRASS	Sn-Plating

ITEM NO.	DESCRIPTION	DRAWN	DATE

东莞市高迪电子有限公司
Dong Guan KDRR Electronic Switch JacK Co., Ltd.

TOLERANCE UNLESS OTHERWISE STATED : Up to 5 ±0.2; Above 5 ~ 15 ±0.3; Above 15 ~ 30 ±0.4; Above 30 ~ 50 ±0.5; Angle ±0.3°

3RD. ANGEL'S | UNITS | MM

DRAWN BY: Jack Lu	DATE 03/03/17	MAT'L		TITLE	JACK		
CHECKED BY: Jacky Chen	DATE 03/03/17	FINISH		MODLE	PHONE JACK		
APPROVED BY: Tony Kao	DATE 03/03/17	SCALE	1 : 1	DWG NO.	PJ-364x-x-S124	SIZE	A4
		SHEET NO.	1 of 1	PART NO.	PJ-364x-x-S124	VER	R