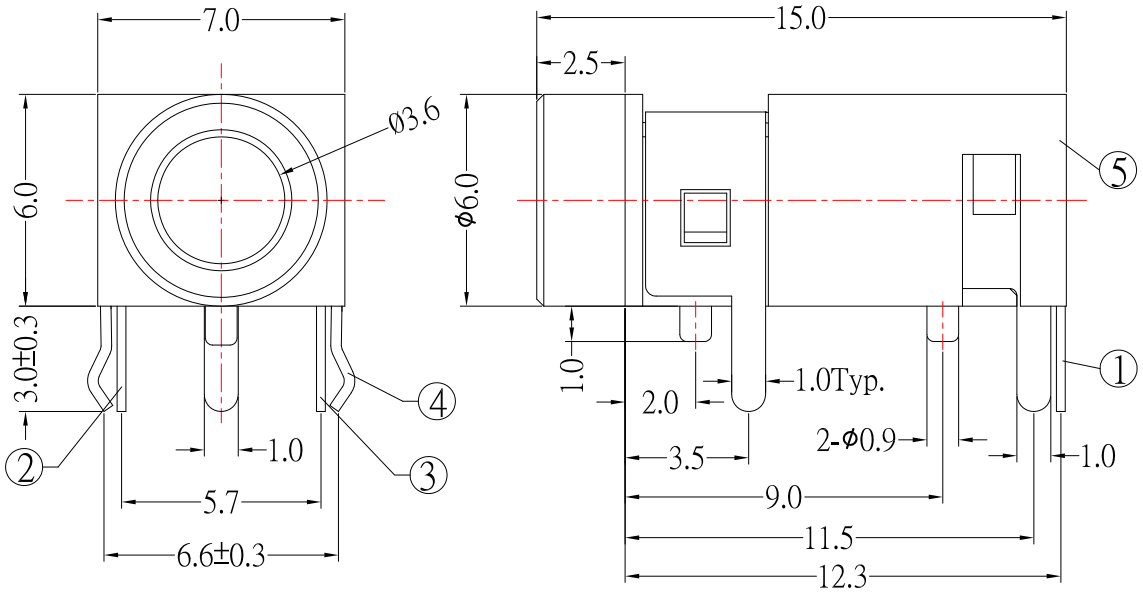

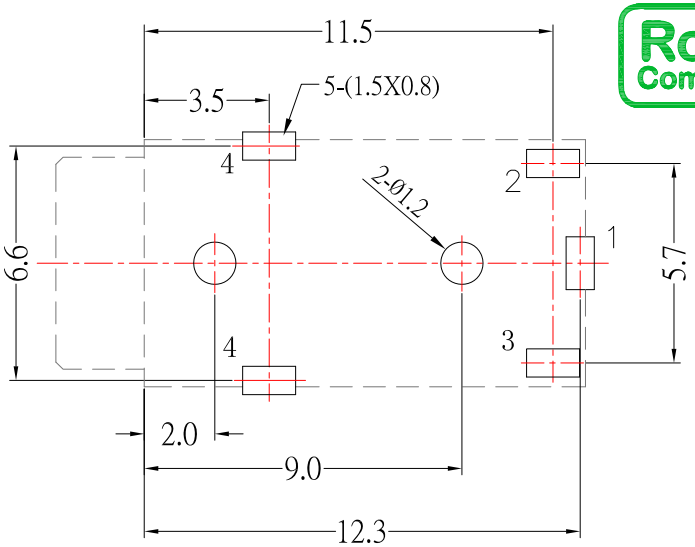

P.C.B LAYOUT MOUNTING PATTERN
(TOP VIEW)

MODEL NO.	PJ-D3022-S124
SCHEMATIC	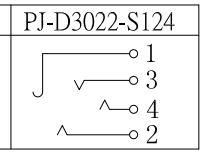

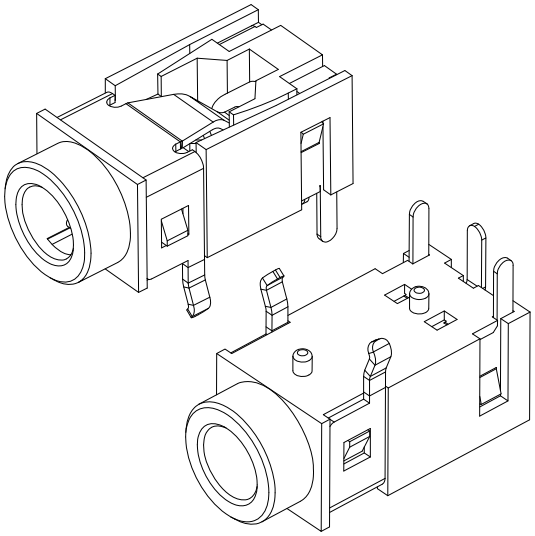

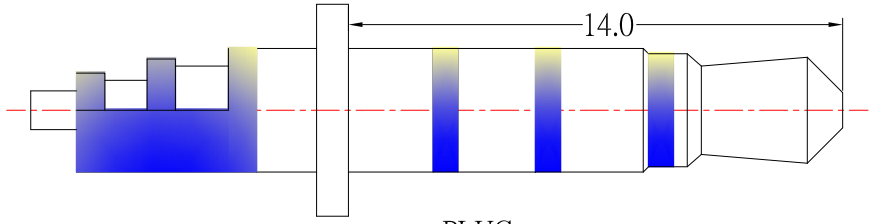

PLUG

SPECIFICATION

1.Rating ：DC 30V 0.5A；
2.Contact resistance：≤ 30mΩ；
3.Insulation resistance：≥100MΩ；
4.Withstand voltage：500VAC ；
5.Insertion and extraction force：3-20N
6.life test：5,000 cycles。

NO.	DESCRIPTION	QTY	MATERIAL	PLATING
5	HOUSING	1	PBT	
4	CONTACT FOOT #4	1	Phosphor Bronze	Sn-Plating
3	CONTACT FOOT #3	1	Brass	Sn-Plating
2	CONTACT FOOT #2	1	Phosphor Bronze	Sn-Plating
1	CONTACT FOOT #1	1	Phosphor Bronze	Sn-Plating

ITEM NO.	DESCRIPTION	DRAWN	DATE
1	更新為A0版	Jack	102616

东莞市高迪电子有限公司
Dong Guan KDRR Electronic Switch JacK Co., Ltd.

TOLERANCE UNLESS OTHERWISE STATED：
Up to 5 ±0.2
Above 5 ~ 15 ±0.3
Above 15 ~ 30 ±0.4
Above 30 ~ 50 ±0.5
Angle ±0.3°

3RD. ANGEL'S | UNITS MM

DRAWN BY: Jack Lu	DATE 10/26/16	MAT'L		TITLE	JACK		
CHECKED BY: Jacky Chen	DATE 10/26/16	FINISH		MODLE	PHONE JACK		
APPROVED BY: Tony Kao	DATE 10/26/16	SCALE	1 : 1	DWG NO.	PJ-D3022-S124	SIZE	A4
		SHEET NO.	1 of 1	PART NO.	PJ-D3022-S124	VER	A0