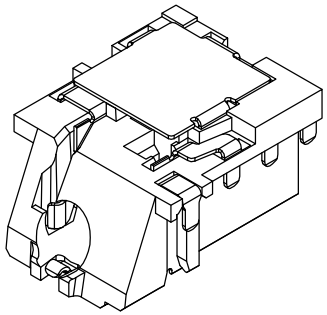

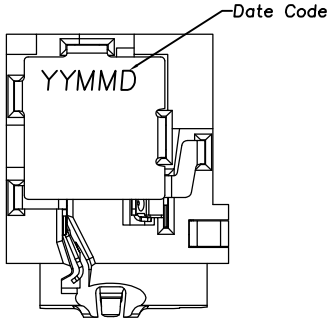


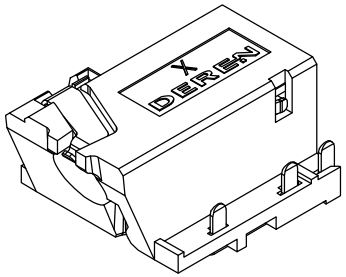

MODEL NO.:
PJR-D32650-A BK7 AS02 L-RH
(1) (2) (3) (4) (5) (6)

(1) Series no.
(2) Schematic type: A
(3) Housing material and color:
BK7=PA10T(black)
(4) Terminal plating:
AS02=1#~4#Gold flash on contact area, Plate Matte tin on solder tail; 5#,6# Silver plating.
(5) Packing mode: L=Reel packing
(6) Environmental requirements:
RH=RoHS & Halogen Free

SPECIFICATION:
1.Electrical characteristics
1.1.Current rating: DC 0.5A max.
1.2: Voltage rating: DC 30V.
1.3: Contact resistance: ≤50mΩ(Initial)
After test: ≤100mΩ
1.4.Insulation resistance:
100MΩ min. at 500V DC.
1.5.Withstanding voltage:
500V AC for 1 minute.
2.Mechanical characteristics
2.1.Life test: 5000 cycles min,
2.2.Mating force: 3~30N,
Unmating force: 3~30N.
3.Temperature range: -40 ˚C-+80 ˚C

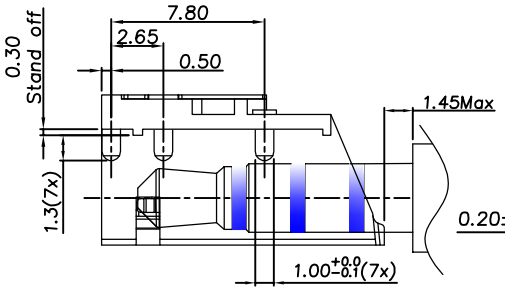


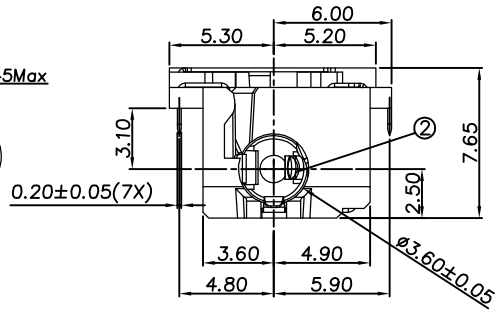


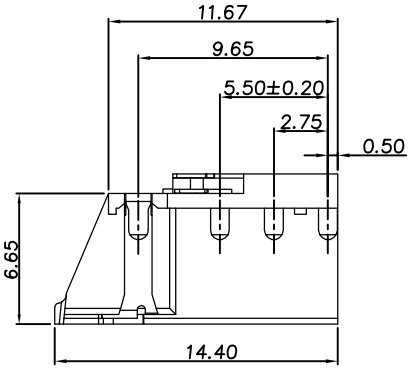


SCHEMATIC

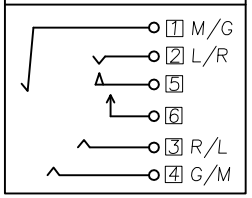


1 : Terminal No.
① : Project No.

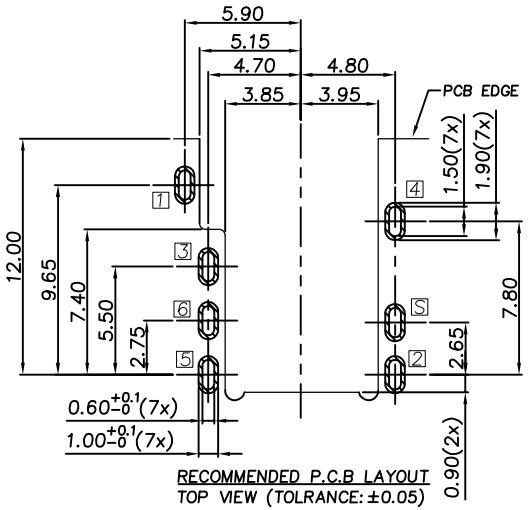


RECOMMENDED P.C.B LAYOUT
TOP VIEW (TOLRANCE: ±0.05)

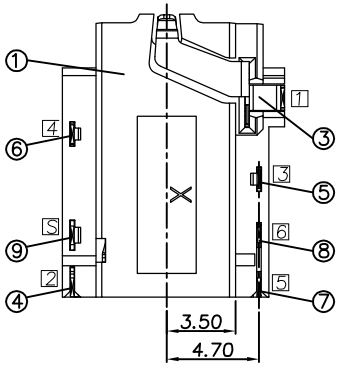


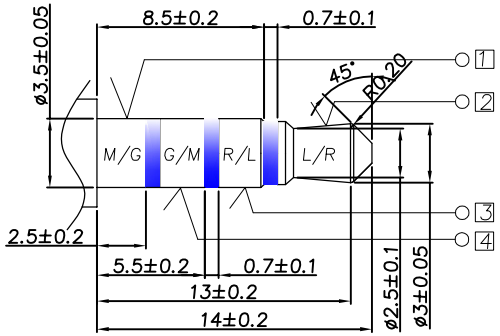


Matching Plug

| NO. | DESCRIPTION | QTY | MATERIAL | REMARK |
|---|---|---|---|---|
| ⑨ | Shild shell 5 | 1 | C2680, t0.2 | Nickel 50u" Min |
| ⑧ | Make terminal 6 | 1 | C5210, 0.20t | 5u" Silver, 50u" Ni underplated. |
| ⑦ | Transfer Spring 5 | 1 | C5210, 0.20t | |
| ⑥ | Ring spring 4 | 1 | C5210, 0.20t | Gold Flash on contact area, Plate Matte tin on solder tail, Nickel underplated. |
| ⑤ | Ring spring 3 | 1 | C5210, 0.20t | |
| ④ | Tip spring 2 | 1 | C5210, 0.20t | |
| ③ | Earth spring 1 | 1 | C5210, 0.20t | |
| ② | Separator | 1 | PA10T UL-94V0 | Black |
| ① | Housing | 1 | | Black |

| ECN NO. | REV | DATE | DESCRIPTION | CHANGE | APPRO. |
|---|---|---|---|---|---|
| | A-0 | 2015.10.12 | NEW | 刘 伟 | 余 军 |

| | |
|---|---|
| Angle | ±2° |
| 10<L≤20 | ±0.3 |
| 5<L≤10 | ±0.25 |
| L≤5 | ±0.20 |

GENERAL TOLERANCE UNLESS OTHERWISE NOTED

DESIGN: 刘 伟 2015.10.12
CHECK:
APPROVAL:
SCALE: 3:1 UNIT:mm A4 SHEET: 1 of 1

东莞市高迪电子有限公司

TITLE: Ø3.5mm PHONE JACK
MODEL NO. PJR-D32650-ABK7AS02L-RH
FILE NO. Q/SSY.QW-001A-0546

原始设计: 刘 伟 承认: 余 军 日期: 2015.1.23

SSYE