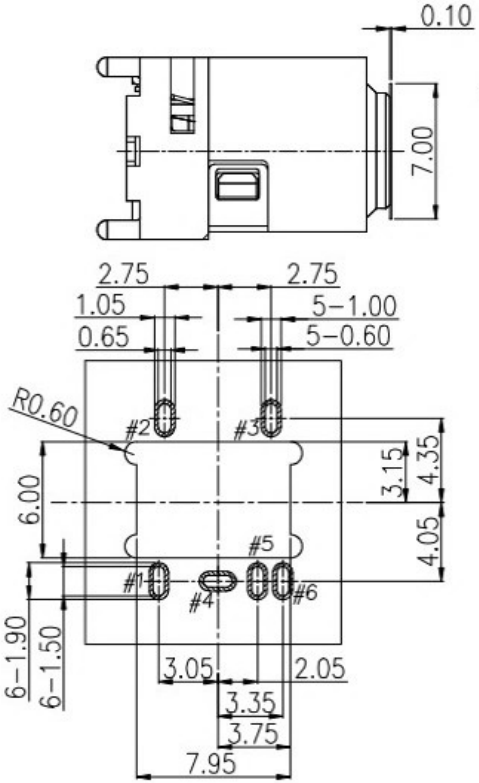

RECOMMENDED P.C.B LAYOUT
TOP VIEW (TOLRANCE:±0.05)

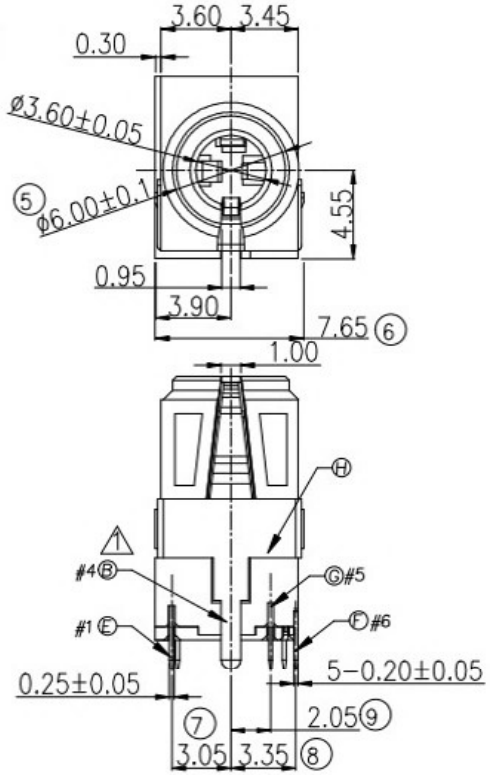

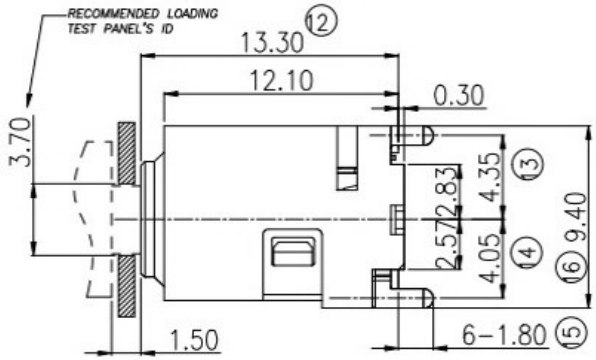

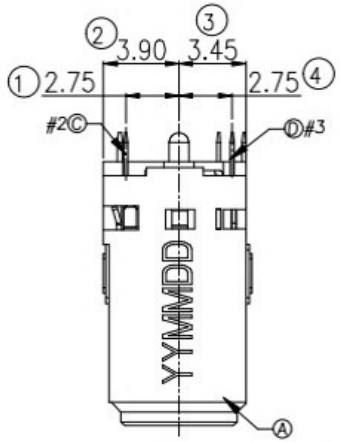

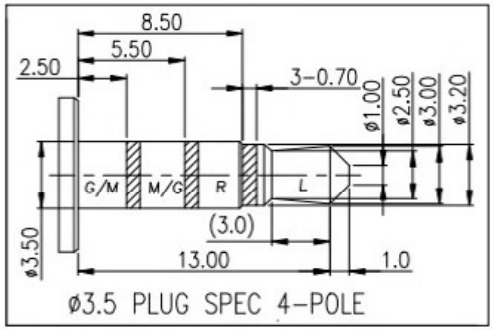

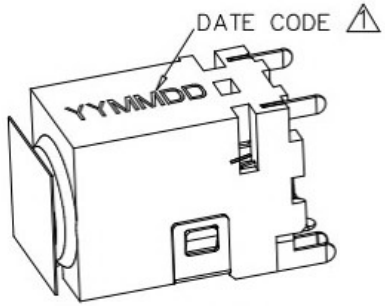

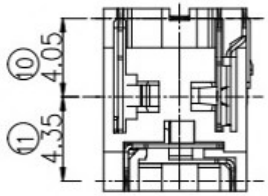

SCHEMATIC

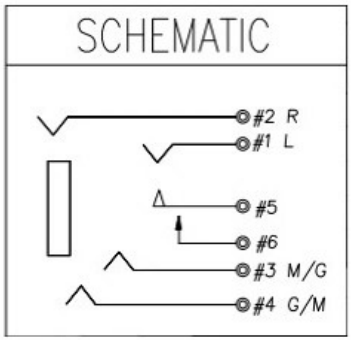

NOTES:

1. MATERIAL: SEE "TABLE 1"
2. FINISH: SEE "TABLE 1"
3. ELECTRICAL:
   - 3.1. VOLTAGE RATING: 12 VAC RMS
   - 3.2. CURRENT RATING: 1 AMP
   - 3.3. CONTACT RESISTANCE: 50mΩ Max.(Initial), 100mΩ Max.(After Life test)
   - 3.4. INSULATION RESISTANCE: 100 MΩ Min., 500VDC.(Initial), 50 MΩ Min., 500VDC.(After Humidity test)
   - 3.5. WITHSTAND VOLTAGE: 500 VAC RMS 50(60)Hz, 1 minute
4. INITIAL:
   - 4.1. INSERTION FORCE: 0.5~3.0Kgf
   - 4.2. WITHDRAWAL FORCE: 0.5~3.0Kgf
5. OPERATING LIFE: 5000 CYCLES MIN.
6. PRINTED DATE CODE "YY MM DD" ON TOP OF CONNECTOR

NO.	DESCRIPTION	QTY	MATERIAL	REMARK
⑨	Insulator	1	PA10T UL94 V-0	Black
⑧	Housing	1	PA10T UL94 V-0	Black
⑦	Shell		C5210, 0.20t	Nickel 50u" Plating
⑥	Shunt terminal 6	1	C5210, 0.20t	Gold Flash On Contact Area and Solder Tail Area, All over 50u" Nickel Plated
⑤	Transfer Spring 5	1	C5210, 0.20t	
④	Ring spring 4	1	C5210, 0.20t	Gold Flash On Contact Area and Solder Tail Area, All over 50u" Nickel Plated
③	Ring spring 3	1	C5210, 0.20t	
②	Tip spring 2	1	C5210, 0.20t	
①	Earth spring 1	1	C5210, 0.20t	

ECN NO.	REV	DATE	DESCRIPTION	CHANGE	APPRO.
	A-0	2021.05.18	NEW	罗振强	余 军

Angle	±2°	DESIGN	罗振强 2021.05.18
.x	±0.35	CHECK	
.xx	±0.25	APPROVAL	
.xxx	±0.10		

GENERAL TOLERANCE UNLESS OTHERWISE NOTED

SCALE: 1:1 UNIT:mm A4

东莞市高迪电子有限公司

CUSTOMER DRAWING	TITLE:	ø3.5mm PHONE JACK
	MODEL NO.	
SHEET: 1 of 1	FILE NO.	Q/DY.QW-001A-0745