Matching Plug

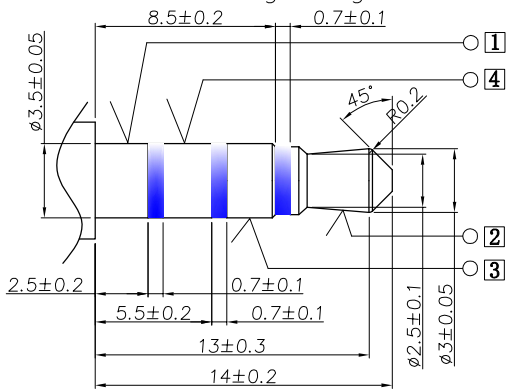

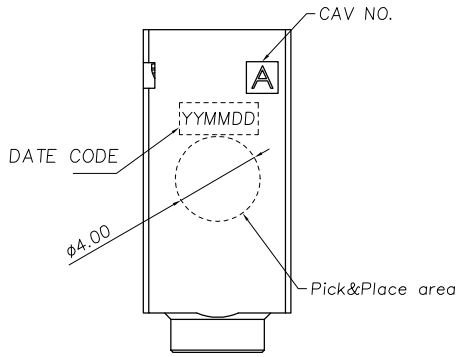

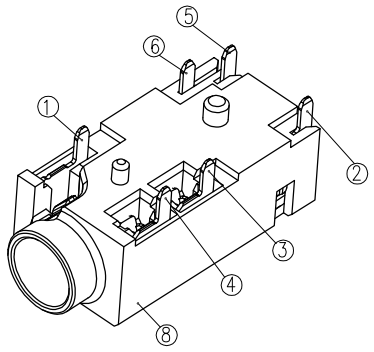

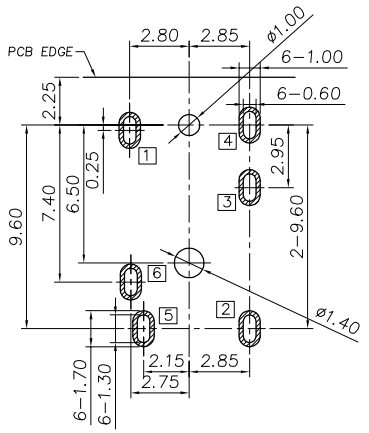

RECOMMENDED PCB LAYOUT(TOP VIEW)
(GENERAL TOLERANCE±0.05)

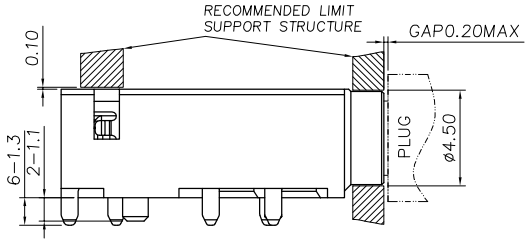

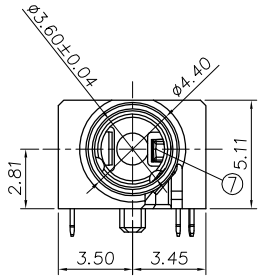

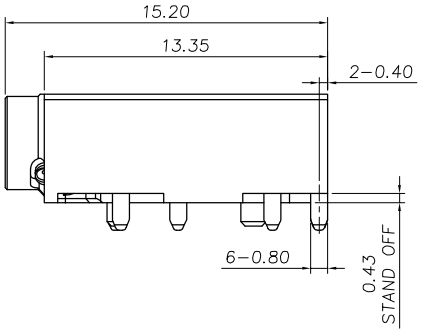

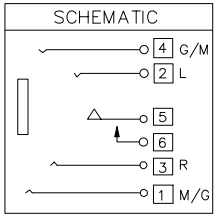

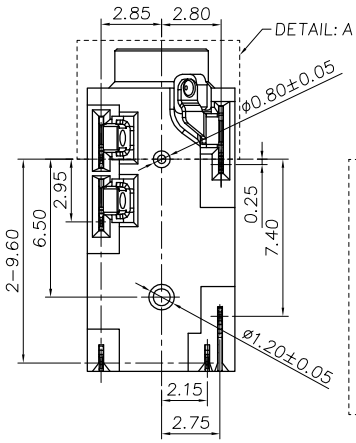

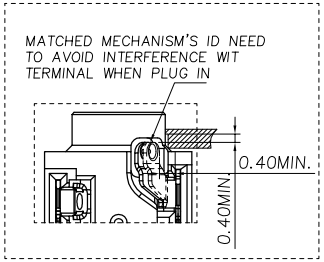

SPECIFICATION:

1.Electrical characteristics
- 1-1.Current rating: 1Apms.
- 1-2: Voltage rating: 12V DC.
- 1-3: Contact resistance: Between Jack-Plug: 50mΩ max;
  Within Jack Break Spting、Make Spring: 30mΩ max.
- 1-4.Insulation resistance: 100MΩ min. at 500V DC.
- 1-5.Withstanding voltage: Mated Set or Plug: 250V AC
  Or Jack: 500V AC.

2.Mechanical characteristics
- 2-1.Life test: 5000 cycles min,
- 2-2.Mating force: 3~30N.
  Unmating force: 3~30N.

3.Operating Temperatures: -25℃~+70℃, 85%RH Max.

NO.	DESCRIPTION	QTY	MATERIAL	REMARK
⑧	Housing	1	PA10T R630NH UL 94-V0	Black
⑦	Insulator	1	PA10T R630NH UL 94-V0	Black
⑥	Shunt terminal 6	1	C5210-EH, 0.20t	Gold Flash Contact area and Solder Tail Area; All Over 50u"Nickel Underplated.
⑤	Transfer Spring 5	1	C5210-EH, 0.20t	
④	Ring spring 4	1	C5191R-H, 0.20t	
③	Ring spring 3	1	C5191R-H, 0.20t	
②	Tip spring 2	1	C5210-EH, 0.20t	
①	Earth spring 1	1	C5191R-H, 0.20t	

ECN NO.	REV	DATE	DESCRIPTION	CHANGE	APPRO.
	A-0	2021.05.16	NEW	罗振强	余 军

Angle	±2°
.x	±0.35
.xx	±0.25
.xxx	±0.15

GENERAL TOLERANCE UNLESS OTHERWISE NOTED

DESIGN	罗振强	2021.05.16
CHECK		
APPROVAL		

SCALE: 3:1 UNIT:mm A4

东莞市高迪电子有限公司

CUSTOMER DRAWING

TITLE:	ø3.5mm PHONE JACK
MODEL NO.	PJR-D3291P-ABK7AU02L-RH
SHEET: 1 of 1	FILE NO. Q/DY.QW-001A-0743

原始设计：刘 伟 承认：余 军 日期：2020.09.23