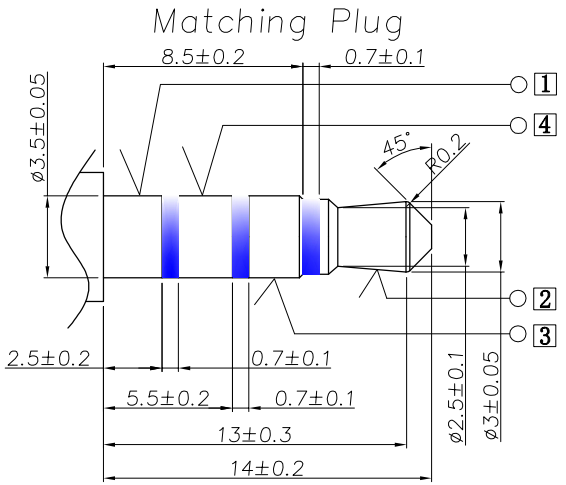

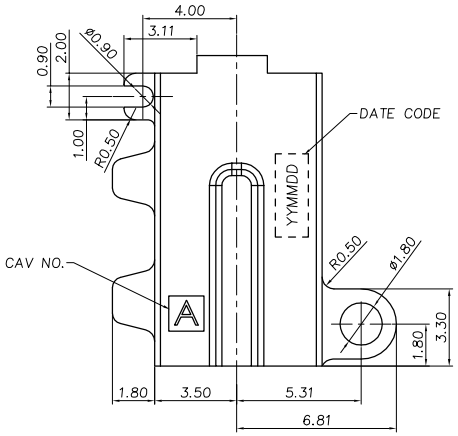

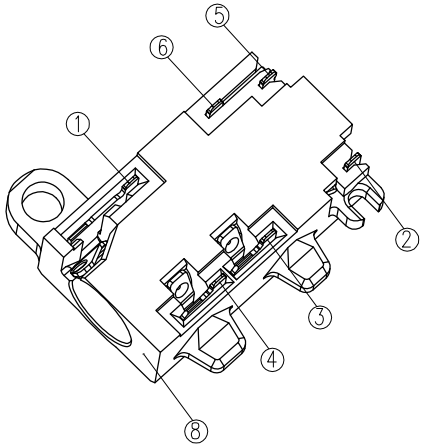

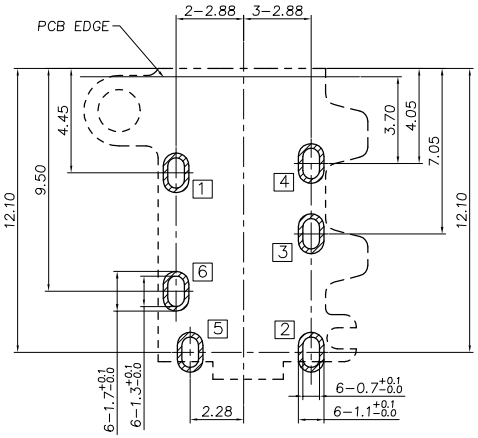

RECOMMENDED PCB LAYOUT(TOP VIEW)
(GENERAL TOLERANCE±0.05)

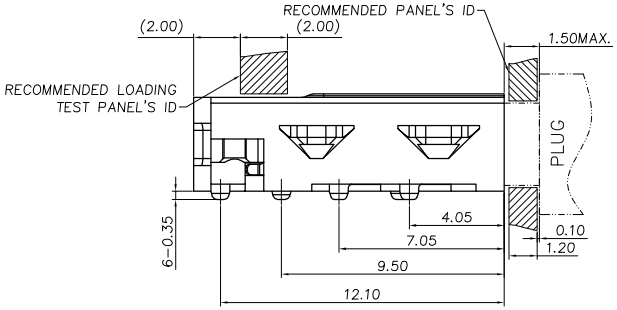

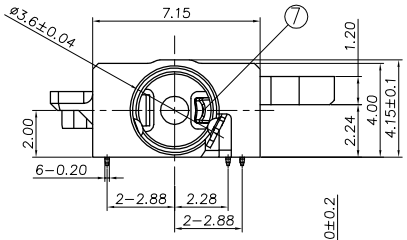

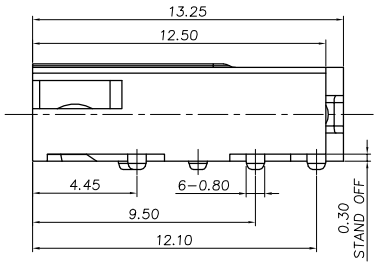

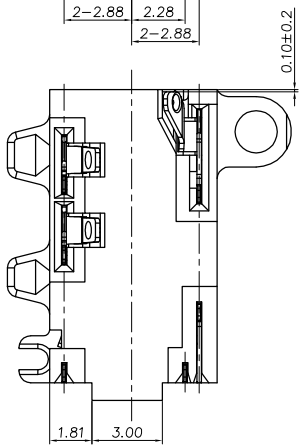

MODEL NO. :
PJ-D3291M-ABK7XXXXL-RH
(1) (2)(3) (4)(5)(6)

(1) Series no.
(2) Schematic type: A
(3) Housing color:
BK7=Black.
(4) Terminal plating:
AU02=Gold Flash
AU03=Au 3u"
(5) Packing mode:
L=Reel packing.
(6) Environmental requirements:
RH=RoHS 2.0 + Halogen Free.

SPECIFICATION:

1. Electrical characteristics
   1-1. Current rating:DC 1A
   1-2:Voltage rating:DC 12V.
   1-3:Contact resistance:50mΩ max;
   100mΩ max(After humidity test)
   1-4. Insulation resistance:100MΩ min. at 500V DC.
   1-5. Withstanding voltage:500V AC for 1 minute.
2. Mechanical characteristics
   2-1. Life test:2000 cycles min,
   2-2. Mating force:8～30N Initial;
   25N Max, After The 2000th;
   Unmating force:6-18N Initial;
   5N Min, After The 2000th;

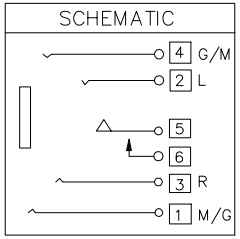

NO.	DESCRIPTION	QTY	MATERIAL	REMARK
8	Housing	1	PA10T R630NH UL 94-V0	Black
7	Insulator	1	PA10T R630NH UL 94-V0	Black
6	Shunt terminal 6	1	C5210-EH, 0.20t	Gold Flash Contact, and Solder Tail Area, All Over 50u" Nickel Underplated.
5	Transfer Spring 5	1	C5210-EH, 0.20t	
4	Ring spring 4	1	C5191R-H, 0.20t	Gold Flash/Au 3u" On Contact, Gold Flash On Solder Tail Area, All Over 50u" Nickel Underplated.
3	Ring spring 3	1	C5191R-H, 0.20t	
2	Tip spring 2	1	C5210-EH, 0.20t	
1	Earth spring 1	1	C5191R-H, 0.20t	

ECN NO.	REV	DATE	DESCRIPTION	CHANGE	APPRO.
	A-1	2021.04.19	新增3U"规格	刘 伟	余 军
	A-0	2020.09.01	NEW	刘 伟	余 军

GENERAL TOLERANCE UNLESS OTHERWISE NOTED	
Angle	±2°
.x	±0.30
.xx	±0.20
.xxx	±0.10

DESIGN	刘 伟	2021.04.19
CHECK		
APPROVAL		

SCALE: 3:1 UNIT:mm A4

东莞市高迪电子有限公司

CUSTOMER DRAWING

TITLE:	ø3.5mm PHONE JACK
MODEL NO.	PJR-D3291M-ABK7XXXXL-RH
FILE NO.	Q/DY.QW-001A-XXXX

SHEET:1 of 1

原始设计：刘 伟 承认：刘 伟 日期：2020.09.01