MODEL NO.:

PJR-D3261K - A BK7 AS02 L - RH

(1) (2) (3) (4) (5) (6)

(1) Series no.

(2) Schematic type: A,B,C

(3) Housing color:
BK7=Black

(4) Terminal plating:
AS02=Plating Tin/Gold 1u" min.

(5) Packing mode:L=Reel packing

(6) Environmental requirements:
Rh=RoHS 2.0 + Halogen Free

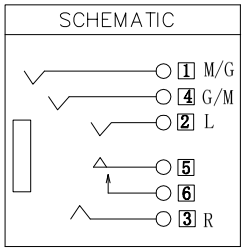

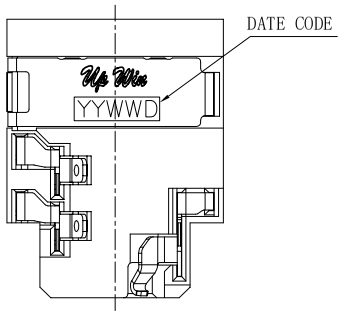

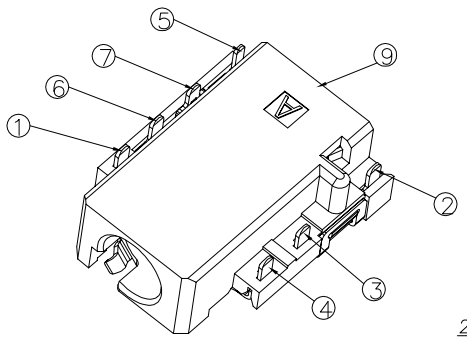

Matching Plug

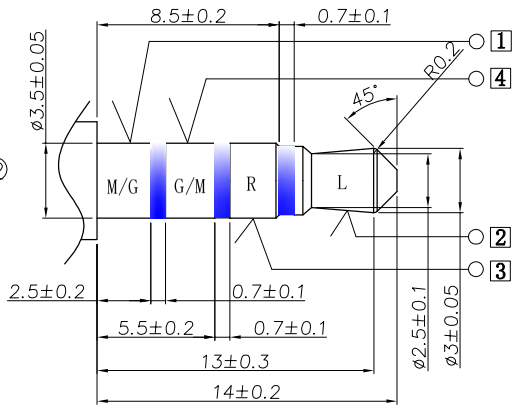

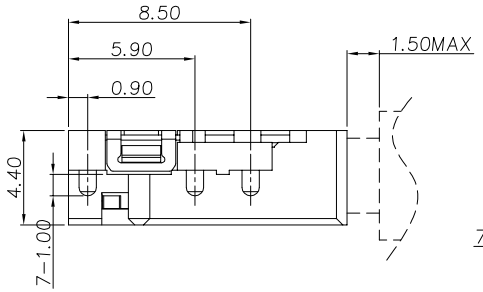

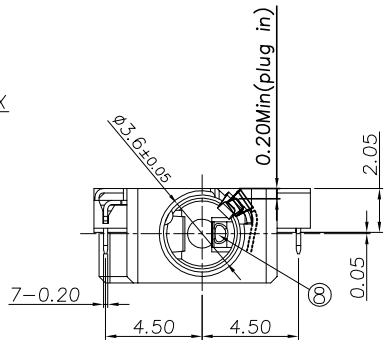

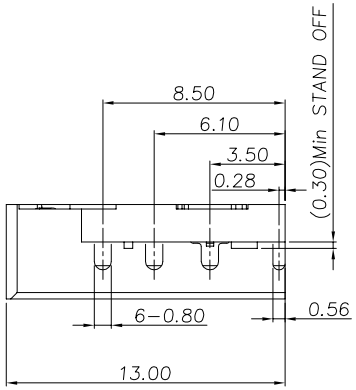

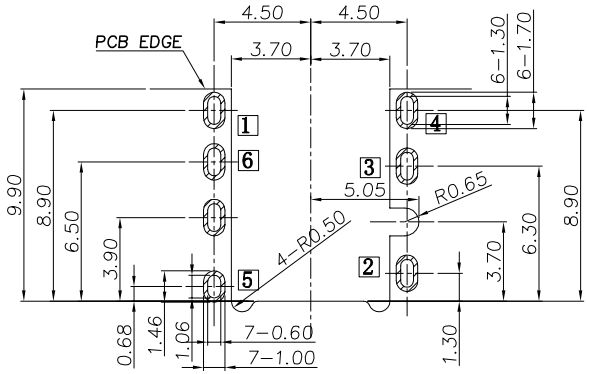

RECOMMENDED P.C.B LAYOUT
TOP VIEW (TOLRANCE:±0.05)

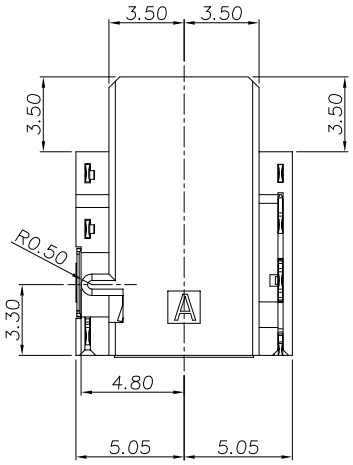

SPECIFICATION:

1. Electrical characteristics
   1-1. Current rating:DC 1.0A max.
   1-2:Voltage rating:DC 12V.
   1-3:Contact resistance:50mΩ max.
   1-4. Insulation resistance:100MΩ min. at 500V DC.
   1-5. Withstanding voltage:500V AC for 1 minute.
2. Mechanical characteristics
   2-1. Life test:5000 cycles min,
   2-2. Mating force:3～30N.
   Unmating force:3～30N.

NO.	DESCRIPTION	QTY	MATERIAL	REMARK
9	Housing	1	HIGH TEMPERATURE PLASTIC	Black
8	Insulator	1	HIGH TEMPERATURE PLASTIC	Black
5	Transfer Spring 5	1	Phosphor bronze, 0.20t	Gold Flash On Contact Area And Solder Tail Area, All over 50u" Nickel Plated
7	shell	1	Phosphor bronze, 0.20t	Plating Ni 50u"
6	Shunt terminal 6	1	Phosphor bronze, 0.20t	Gold Flash On Contact Area 80u"matte tin Plating on Solder Tail Area, All over 50u"Nickel Plated
4	Ring spring 4	1	Phosphor bronze, 0.20t	
3	Ring spring 3	1	Phosphor bronze, 0.20t	
2	Tip spring 2	1	Phosphor bronze, 0.20t	
1	Earth spring 1	1	Phosphor bronze, 0.20t	

ECN NO.	REV	DATE	DESCRIPTION	CHANGE	APPRO.
	A-0	2017.11.20	NEW	李海鸥	

GENERAL TOLERANCE UNLESS OTHERWISE NOTED	
Angle	±2°
10<L≤20	±0.30
5<L≤10	±0.25
L≤5	±0.20

DESIGN	李海鸥	2017.12.11
CHECK		
APPROVAL		

SCALE: 3:1 UNIT:mm A4 SHEET:1 of 1

东莞市高迪电子有限公司

TITLE:	ø3.5mm PHONE JACK
MODEL NO.	PJR-D3261K-ABK7AS02L-RH
FILE NO.	Q/SSY.QW-001A-0XXX

原始设计：李海鸥 承认：_____ 日期：2017.10.08

SSYE