SPECIFICATION:

1. Electrical characteristics
   - 1-1. Current rating:DC 0.5A max.
   - 1-2:Voltage rating:DC 30V.
   - 1-3:Contact resistance:50mΩ max.
   - 1-4. Insulation resistance:100MΩ min. at 500V DC.
   - 1-5. Withstanding voltage:500V AC for 1 minute.
2. Mechanical characteristics
   - 2-1. Life test:5000 cycles min,
   - 2-2. Mating force:3～30N,
     Unmating force:3～30N.
3. Salt spray test time:48 hours min.

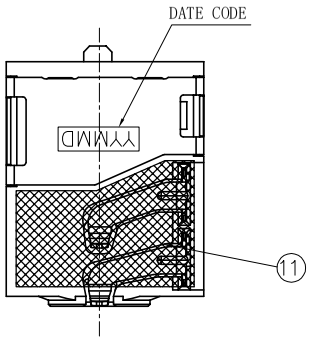

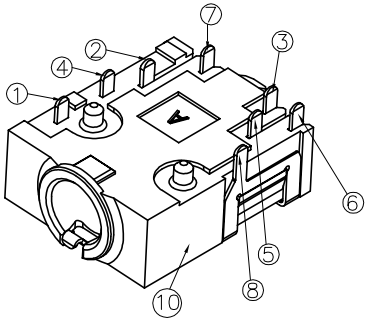

Matching Plug

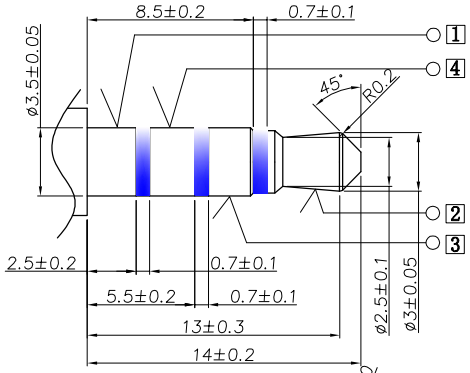

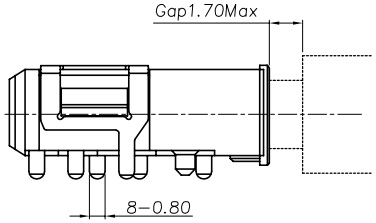

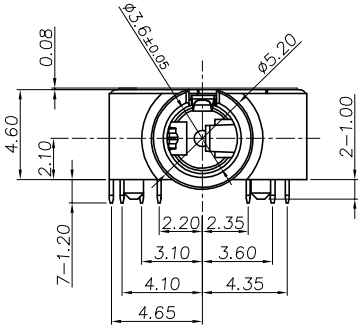

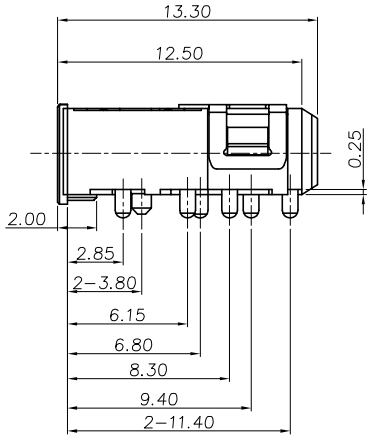

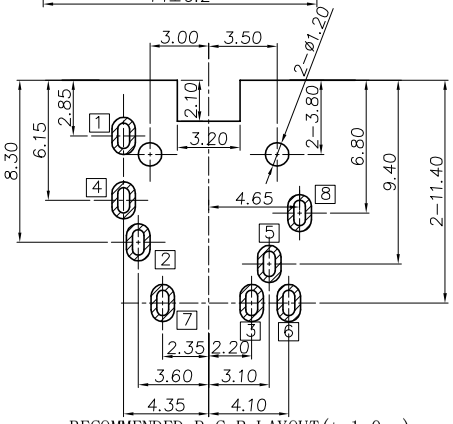

RECOMMENDED P.C.B LAYOUT(t=1.0mm)
TOP VIEW (TOLRANCE:±0.05)

MODEL NO.:
PJR-D3156A-ABK7AS02L-RH
(1) (2) (3) (4) (5) (6)
(1) Series no.
(2) Schematic type: A
(3) Housing color:
BK7=Black
(4) Terminal plating:
AS02=Plating Gold 1″ min.
(5) Packing mode:L=Reel packing
(6) Environmental requirements:
Rh=RoHS 2.0 + Halogen Free

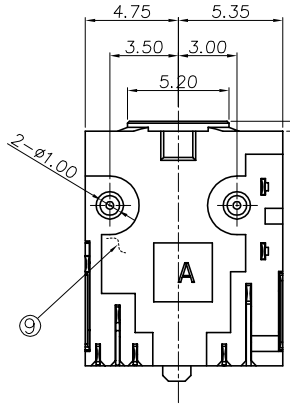

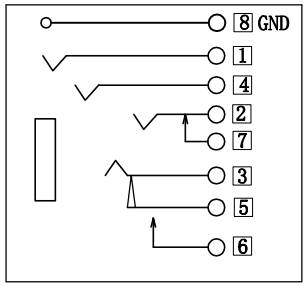

Circuit Diagram A

NO.	DESCRIPTION	QTY	MATERIAL	REMARK
11	Mylar	1	Kapton	Yellow
10	Housing	1	PA10T R630NH+30%GF UL 94V-0	Black
9	Molding	1	PA10T R630NH+30%GF UL 94V-0	Black
7	Shunt terminal 7	1	Phosphor bronze, 0.20t	Gold Flash On Contact Area And Solder Tail , over Nickel Plated.
8	Shell 8	1	Phosphor bronze, 0.20t	Plating Ni .
6	Shunt terminal 6	1	Phosphor bronze, 0.20t	Gold Flash On Contact Area Tin Plating on Solder Tail Area , All over Nickel Plated
5	Transfer Spring 5	1	Phosphor bronze, 0.20t	
4	Ring spring 4	1	Phosphor bronze, 0.20t	
3	Ring spring 3	1	Phosphor bronze, 0.20t	
2	Tip spring 2	1	Phosphor bronze, 0.25t	
1	Earth spring 1	1	Phosphor bronze, 0.20t	

ECN NO.	REV	DATE	DESCRIPTION	CHANGE	APPRO.
	A-0	2016.07.19	NEW	李海鸥	

GENERAL TOLERANCE UNLESS OTHERWISE NOTED	
Angle	±2°
.x	±0.30
.xx	±0.25
.xxx	±0.10

DESIGN	李海鸥	2016.07.19
CHECK		
APPROVAL		

SCALE: 3:1 UNIT:mm A4 SHEET:1 of 1

东莞市高迪电子有限公司

TITLE:	ø3.5mm PHONE JACK
MODEL NO.	PJR-D3156A-ABK7AS02L-RH
FILE NO.	Q/SSY.QW-001A-0580

原始设计：李海鸥 承认：／ 日期：2016.06.07

SSYE