MODEL NO. :

PJR-D3145W-ABK7AS02L-RH

(1) (2)(3) (4)(5)(6)

(1) Series no.

(2) Schematic type:
A, Matching 4Pole Plug.

(3) Housing color:
BK7=Black.

(4) Terminal plating:
AS02=Plating Gold Flash.

(5) Packing mode:
L=Reel packing.

(6) Environmental requirements:
RH=RoHS 2.0 + Halogen Free.

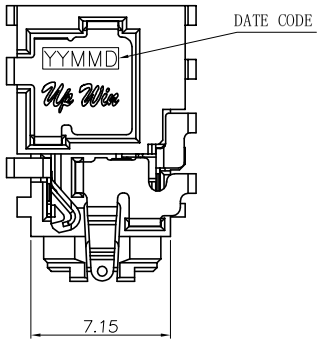

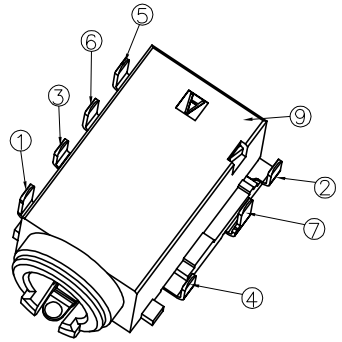

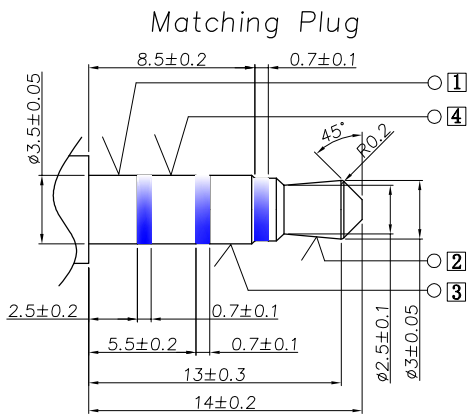

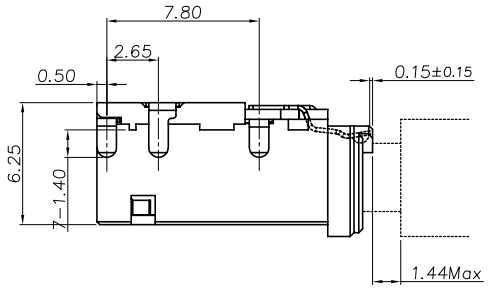

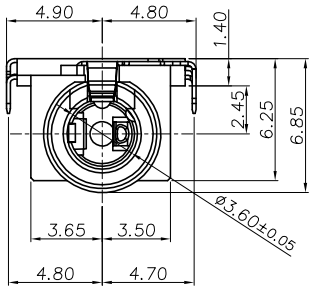

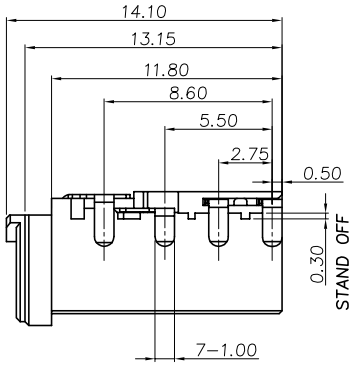

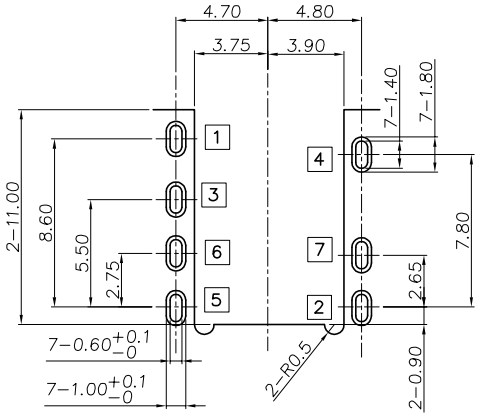

RECOMMENDED P.C.B LAYOUT(t=1.0mm)
TOP VIEW (TOLRANCE:±0.05)

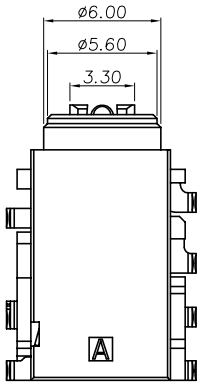

SPECIFICATION:

1. Electrical characteristics
   1-1. Current rating:DC 0.5A max.
   1-2: Voltage rating:DC 30V.
   1-3: Contact resistance:50mΩ max.
   1-4. Insulation resistance:100MΩ min. at 500V DC.
   1-5. Withstanding voltage:500V AC for 1 minute.
2. Mechanical characteristics
   2-1. Life test:5000 cycles min,
   2-2. Mating force:3～30N,
   Unmating force:3～30N.

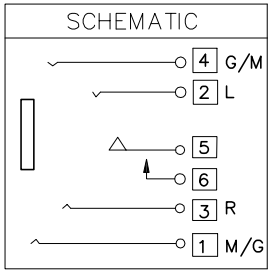

NO.	DESCRIPTION	QTY	MATERIAL	REMARK
9	Housing	1	High Temperature Plastic	Black
8	Insulator	1	High Temperature Plastic	Black
6	Shunt terminal 6	1	Phosphor bronze, 0.20t	Gold Flash On Contact Gold Flash On Solder Tail Area, Nickel UnderPlated
5	Transfer Spring 5	1	Phosphor bronze, 0.20t	
7	Shell	1	Phosphor bronze, 0.20t	Nickel Plated
4	Ring spring 4	1	Phosphor bronze, 0.20t	Gold Flash On Contact Area Tin Plating on Solder Tail Area, All over Nickel Plated
3	Ring spring 3	1	Phosphor bronze, 0.20t	
2	Tip spring 2	1	Phosphor bronze, 0.20t	
1	Earth spring 1	1	Phosphor bronze, 0.20t	

ECN NO.	REV	DATE	DESCRIPTION	CHANGE	APPRO.
	A-0	2018.03.19	NEW	罗振强	李海鸥

Angle	±2°	
.x	±0.30	
.xx	±0.25	
.xxx	±0.10	

GENERAL TOLERANCE UNLESS OTHERWISE NOTED

DESIGN	罗振强	2018.03.19
CHECK		
APPROVAL		

SCALE: 1:1 UNIT:mm A4

东莞市高迪电子有限公司

CUSTOMER DRAWING	TITLE:	ø3.5mm PHONE JACK
	MODEL NO.	PJR-D3145W-ABK7AS02L-RH
SHEET:1 of 1	FILE NO.	Q/DY.QW-001A-0627

原始设计：罗振强 承认：李海鸥 日期：2018.03.06

UP WIN