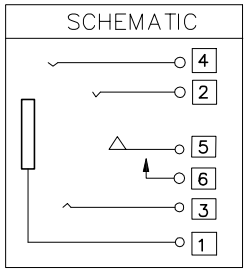

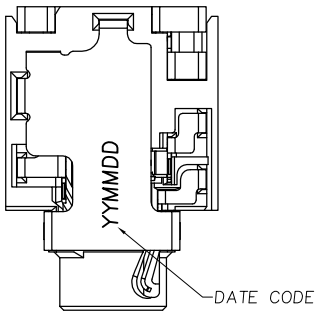

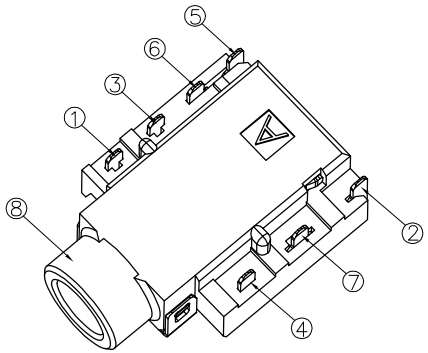

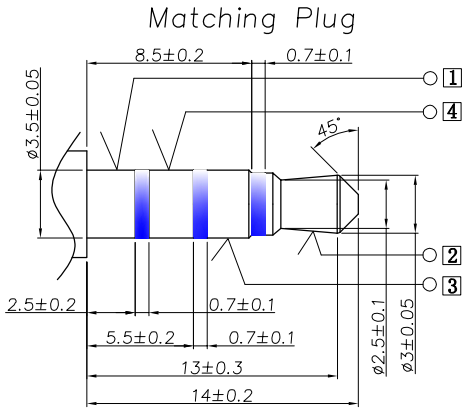

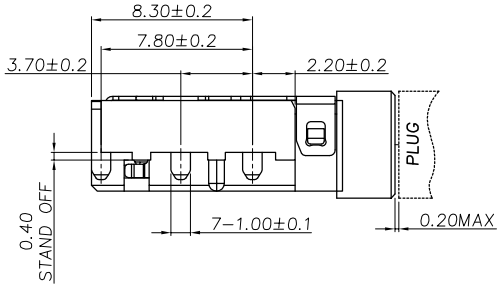

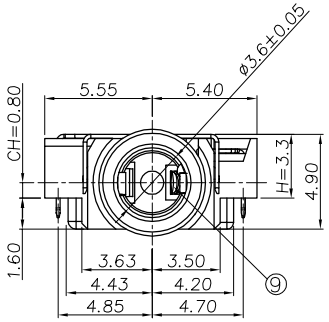

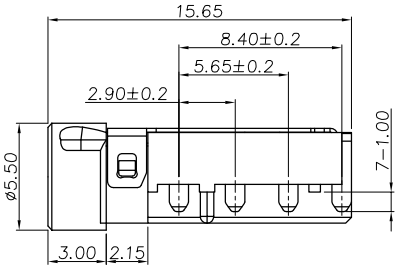

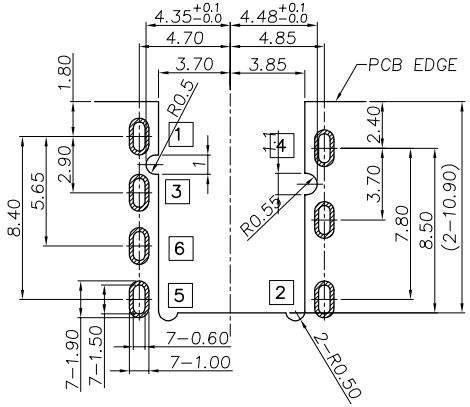

RECOMMENDED P.C.B LAYOUT(t=1.0mm)
TOP VIEW (TOLRANCE:±0.05)

SPECIFICATION:

1. Electrical characteristics
   1-1. Current rating:0.5Apms.
   1-2: Voltage rating:30V DC.
   1-3: Contact resistance:30mΩ max;
   After test:50mΩ max.
   1-4. Insulation resistance:100MΩ min. at 500V DC.
   After test:50MΩ min.
   1-5. Withstanding voltage:500V AC
2. Mechanical characteristics
   2-1. Life test:5000 cycles min,
   2-2. Mating force:3～30N.
   Unmating force:8～30N.
   After test:5-30N
3. Operating Temperatures:-20℃～+70℃
   Preservative temperature range: -40℃～+85℃

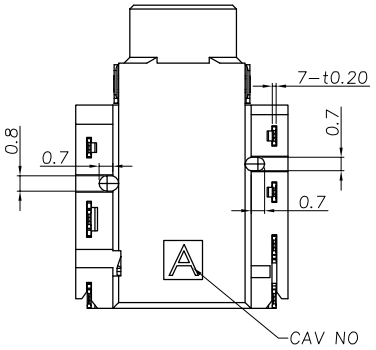

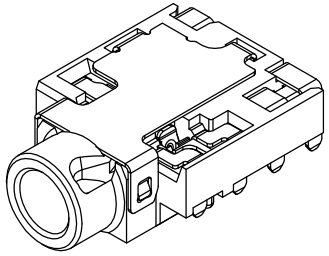

NO.	DESCRIPTION	QTY	MATERIAL	REMARK
⑨	Insulator	1	PA10T UL94 V-0	Black
⑧	Housing	1	PA10T UL94 V-0	Black
⑦	Shell		C5210, 0.20t	Nickel 50u" Plating
⑥	Shunt terminal 6	1	C5210, 0.20t	Gold Flash On Contact Area and Solder Tail Area, All over 50u" Nickel Plated
⑤	Transfer Spring 5	1	C5210, 0.20t	
④	Ring spring 4	1	C5210, 0.20t	Gold Flash On Contact Area and Solder Tail Area, All over 50u" Nickel Plated
③	Ring spring 3	1	C5210, 0.20t	
②	Tip spring 2	1	C5210, 0.20t	
①	Earth spring 1	1	C5210, 0.20t	

ECN NO.	REV	DATE	DESCRIPTION	CHANGE	APPRO.
	A-0	2021.05.18	NEW	罗振强	余 军

Angle	±2°	
.x	±0.35	
.xx	±0.25	
.xxx	±0.10	

GENERAL TOLERANCE UNLESS OTHERWISE NOTED

DESIGN	罗振强	2021.05.18
CHECK		
APPROVAL		

SCALE: 1:1 UNIT:mm A4

东莞市高迪电子有限公司

CUSTOMER DRAWING

TITLE:	ø3.5mm PHONE JACK
MODEL NO.	PJR-D3144A-ABK7AU02L-RH
FILE NO.	Q/DY.QW-001A-0745

SHEET: 1 of 1

原始设计：刘 伟 审核：余 军 日期：2020.11.13