| REV. | ECN NO. | DESCRIPTION | DESIGN | DATE |
|---|---|---|---|---|
| A | | INITIAL | Kai | 2018.03.29 |

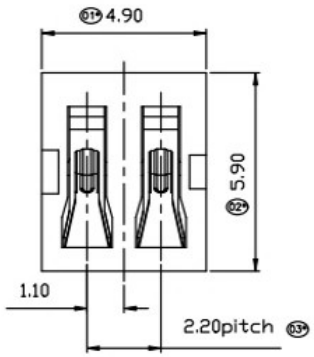


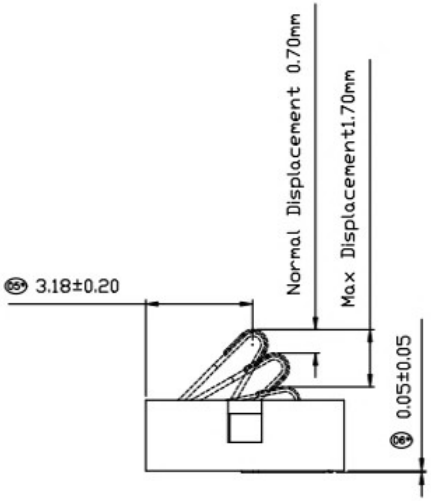


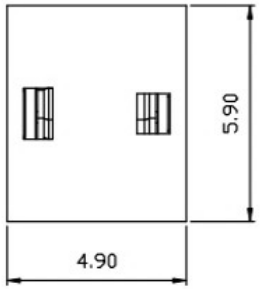


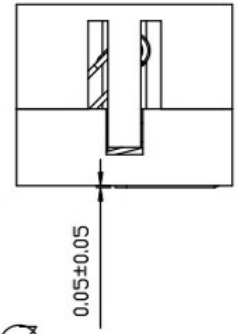


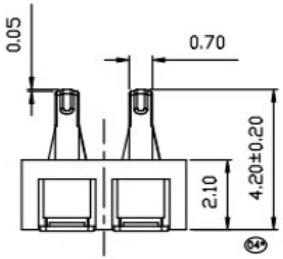


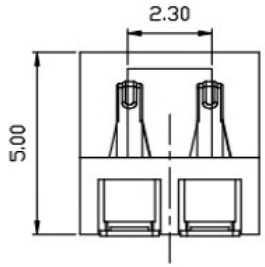


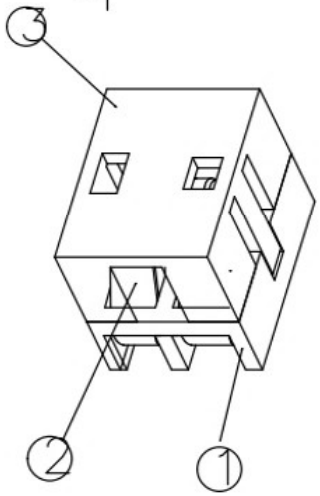


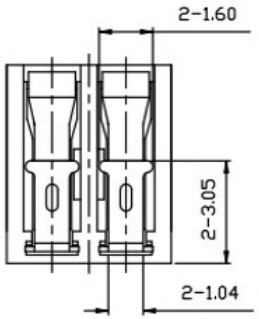


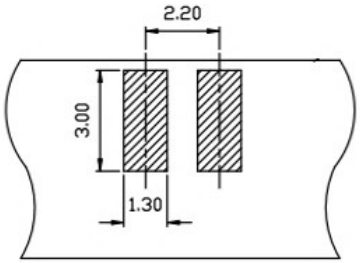


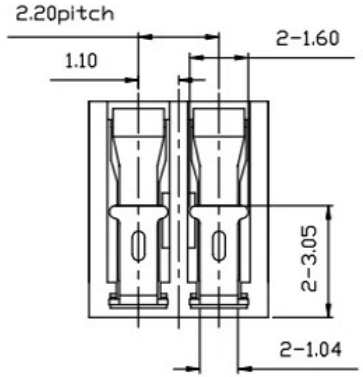


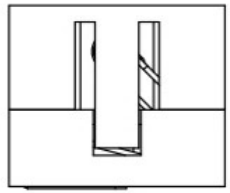

| ITEM | PART NAME | Q'TY | MATERTAL | DESCRIPTION | REMARK |
|---|---|---|---|---|---|
| ② | HOUSING | 1 | LCP | | BLACK |
| ① | CONTACT A | 2 | PHOSPHOR BRONZE 0.20T | Au PLATED | |

UNLESS OTHERWISE SPECIFED TOLERANCES

| DECIMALS: DIM | TOL | ANGLES: DIM | TOL |
|---|---|---|---|
| X. | ±0.50 | X. | ±2° |
| X.X | ±0.30 | X.X | ±1° |
| X.XX | ±0.20 | X.XX | ----- |
| X.XXX | ±0.10 | X.XXX | ----- |

东莞市高迪电子有限公司

| | | | |
|---|---|---|---|
| DWG NO. | | PART NAME: | |
| DESIGN: | | PART NO. | |
| CHECK: | | | |
| APPROVED | | REV. A | UNIT: mm / SHEET: 1/1 |