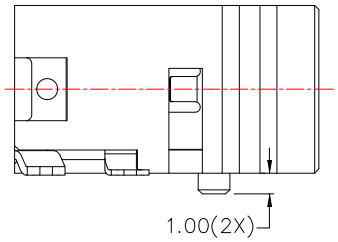

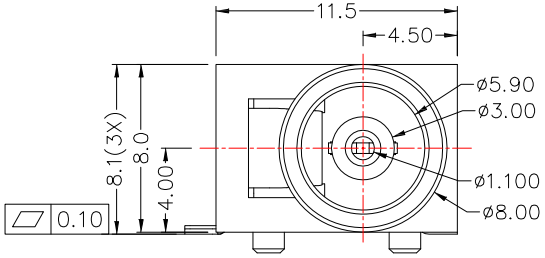

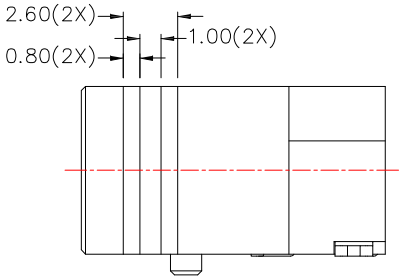

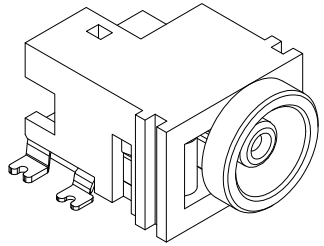

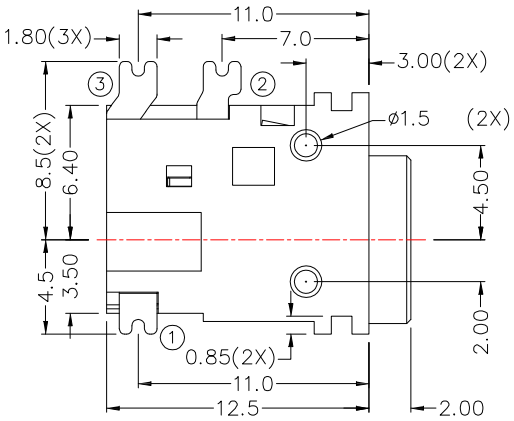

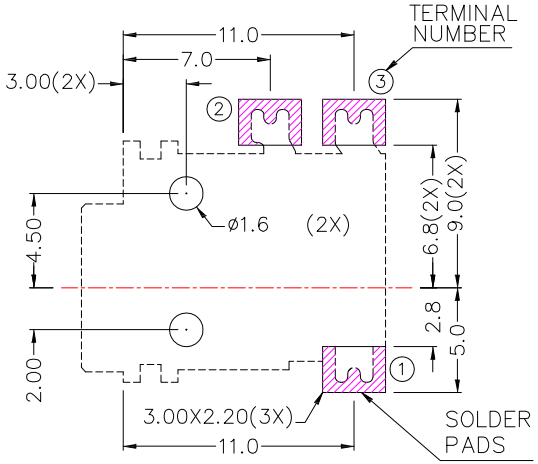

RECOMMENDED SOLDER PAD LAYOUT (TOP VIEW)

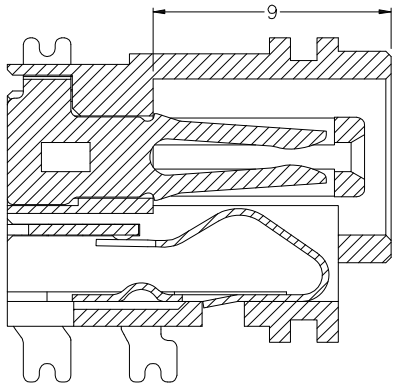

MODEL NO.	DC-076D
SCHEMATIC	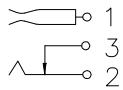

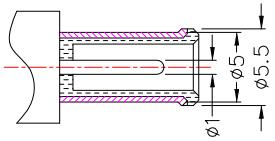

DC MATE PLUG

✳ MATERIAL

TERMINAL 1 : BRASS
TERMINAL 2 : PHOSPHOR BRONZE
TERMINAL 3 : BRASS
HOUSING : PA6T

SPECIFICATION

1. Rating : DC 24V 3.0A
2. Contact resistance : ≤50mΩ
3. Insulation resistance : ≥100MΩ
4. Withstand voltage : 500VAC
5. Insertion and extraction force : 3-30N
6. life test : 5,000 cycles

ITEM NO.	DESCRIPTION	DRAWN	DATE
2	新增剖視圖	Jack	112219
1	新增SPEC	Jack	081214

东莞市高迪电子有限公司
Dong Guan KDRR Electronic Switch JacK Co., Ltd.

TOLERANCE UNLESS OTHERWISE STATED: Up to 5 ±0.2; Above 5 ~ 15 ±0.3; Above 15 ~ 30 ±0.4; Above 30 ~ 50 ±0.5; Angle ±0.3°

3RD. ANGEL'S | UNITS MM

DRAWN BY: Jack Lu	DATE 11/22/19	MAT'L	
CHECKED BY: Jacky Chen	DATE 11/22/19	FINISH	
APPROVED BY: Tony Kao	DATE 11/22/19	SCALE 1 : 1	SHEET NO. 1 of 1

TITLE	JACK		
MODLE	DC JACK		
DWG NO.	DC-076D	SIZE	A4
PART NO.	DC-076D	VER	R2