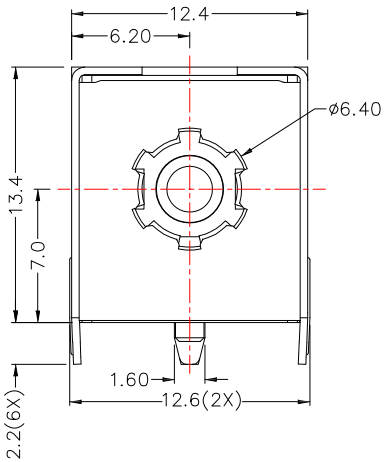

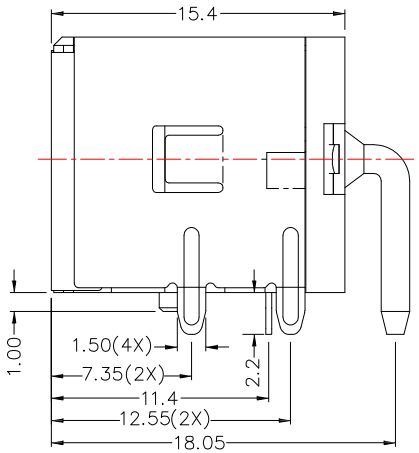

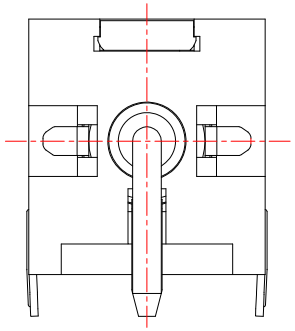

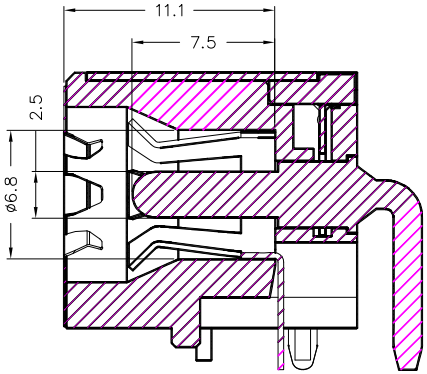

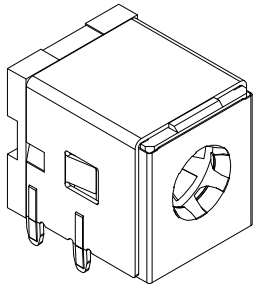

MODEL NO.	DC-079HS-2.5
SCHEMATIC	1 2
CENTER PIN	ø2.5mm

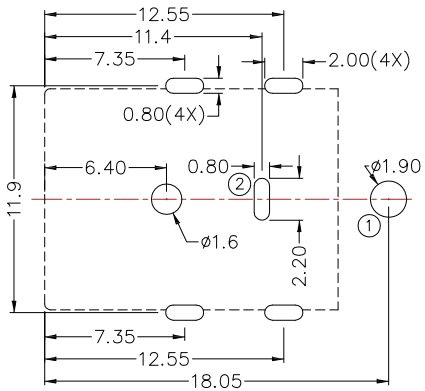

PCB LAYOUT
(TOP VIEW)

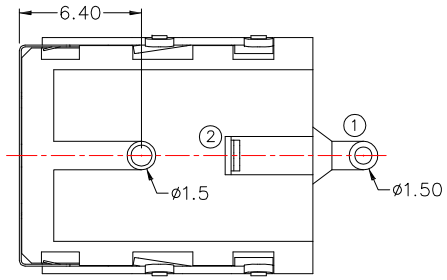

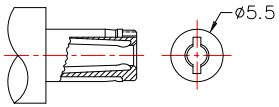

DC MATE PLUG
RATING: DC 20V 7A

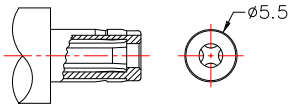

DC MATE PLUG
RATING: DC 20V 10A

*MATERIAL

TERMINAL 1	: BRASS
TERMINAL 2	: PHOSPHOR BRONZE
STOPPER	: C.R.STEEL
SHIELD-A	: C.R.STEEL
SHIELD-B	: STAINLESS STEEL
HOUSING	: PA6T
COVER	: PA6T

SPECIFICATION

1. Rating : DC 20V 10A or 20V 7A
2. Contact resistance : ≤50mΩ
3. Insulation resistance : ≥100MΩ
4. Withstand voltage : 500VAC
5. Insertion and extraction force : 3-30N
6. life test : 5,000 cycles

ITEM NO.	DESCRIPTION	DRAWN	DATE
3	新增剖面圖	Jack	091714
2	新增SPEC	Jack	081214
1	更新材質	Jack	121813

东莞市高迪电子有限公司
Dong Guan KDRR Electronic Switch JacK Co., Ltd.

TOLERANCE UNLESS OTHERWISE STATED : Up to 5 ±0.2; Above 5 ~ 15 ±0.3; Above 15 ~ 30 ±0.4; Above 30 ~ 50 ±0.5; Angle ±0.3°

3RD. ANGEL'S | UNITS | MM

DRAWN BY: Jack Lu	DATE 09/17/14	MAT'L		TITLE	JACK		
CHECKED BY: Jacky Chen	DATE 09/17/14	FINISH		MODLE	DC JACK		
APPROVED BY: Tony Kao	DATE 09/17/14	SCALE	1 : 1	DWG NO.	DC-079HS-2.5	SIZE	A4
		SHEET NO.	1 of 1	PART NO.	DC-079HS-2.5	VER	R3