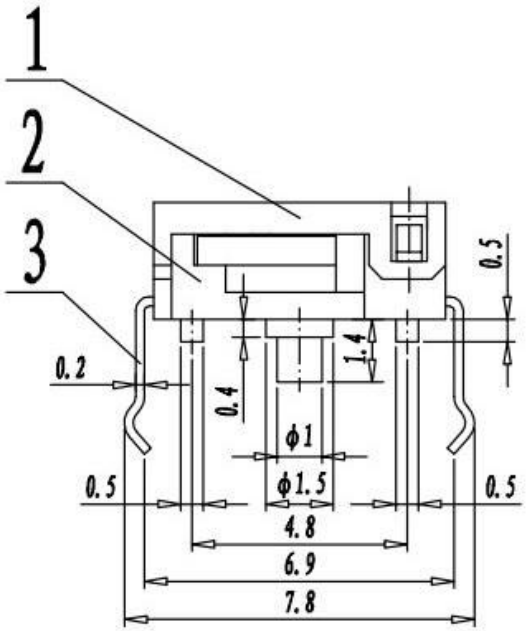

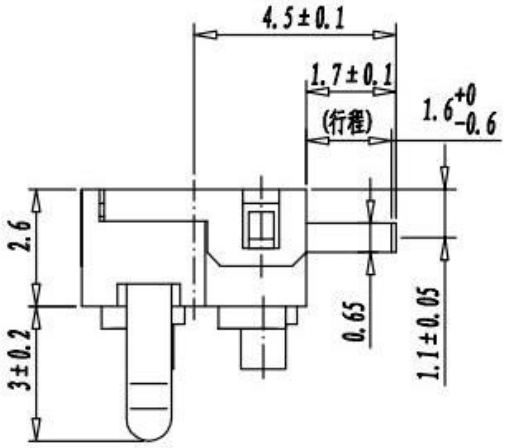

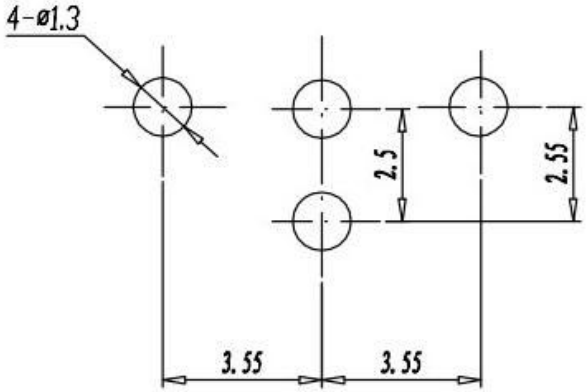

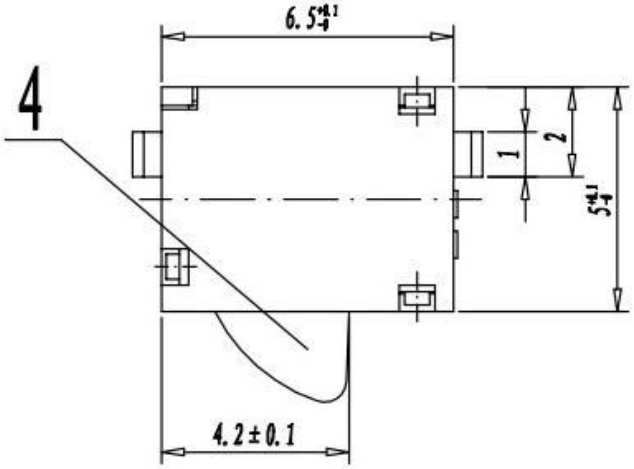

电原理图

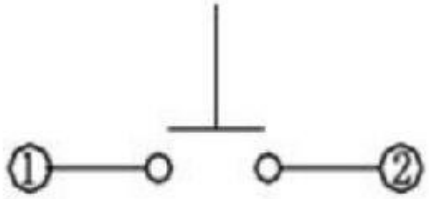

SPECIFICATIONS

Rating	DC 12V 50mA
Contact Resistance	150mΩ Max
Insulation Resistance	50MΩ Min
Operating Force	40 ±15gf
Life	50,000 cycles

NO.	PARTS	MATERIALS	QTY	FINISH
E	THERMINAL	PHOSPHOR BRONZE	4	Ag PLATED
D	CONTACT SPRING	PHOSPHOR BRONZE	1	Ag PLATED
C	COVER	PA46	1	BLACK
B	CASE	PPA	1	BLACK
A	KNOB	PA46	1	BLACK

ITEM NO.	DESCRIPTION	DRAWN	DATE
2	更新高度選項及MODLE	Jack	052115
1	新增高度選項"K"10.5mm	Jack	042115

东莞市高迪电子有限公司
Dong Guan KDRR Electronic Switch JacK Co., Ltd.

TOLERANCE UNLESS OTHERWISE STATED: Up to 5 ±0.2; Above 5 ~ 15 ±0.3; Above 15 ~ 30 ±0.4; Above 30 ~ 50 ±0.5; Angle ±0.3°

3RD. ANGEL'S | UNITS MM

DRAWN BY: Jack Lu	DATE 05/21/15	MAT'L	
CHECKED BY: Jacky Chen	DATE 05/21/15	FINISH	
APPROVED BY: Tony Kao	DATE 05/21/15	SCALE	1 : 1
		SHEET NO.	1 of 1

TITLE	SWITCH
MODLE	DETECTOR SWITCH
DWG NO.	
PART NO.	
SIZE	A4
VER	R2

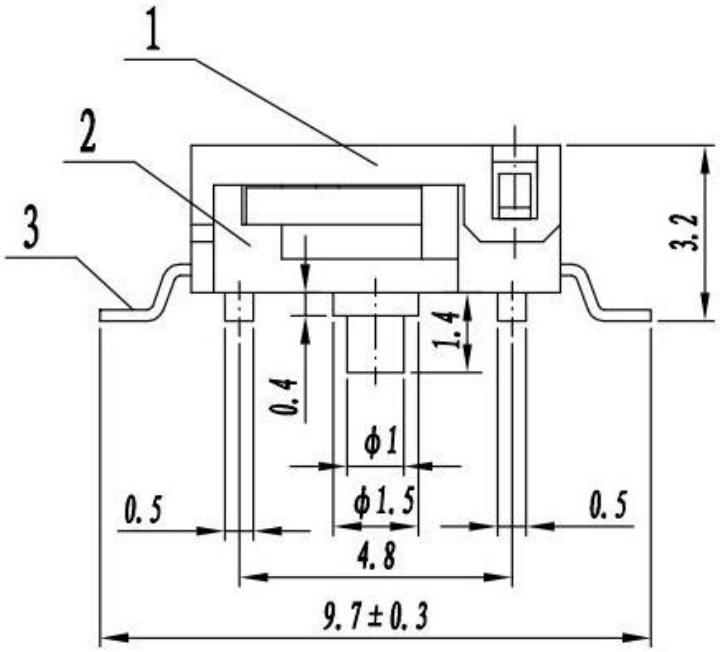

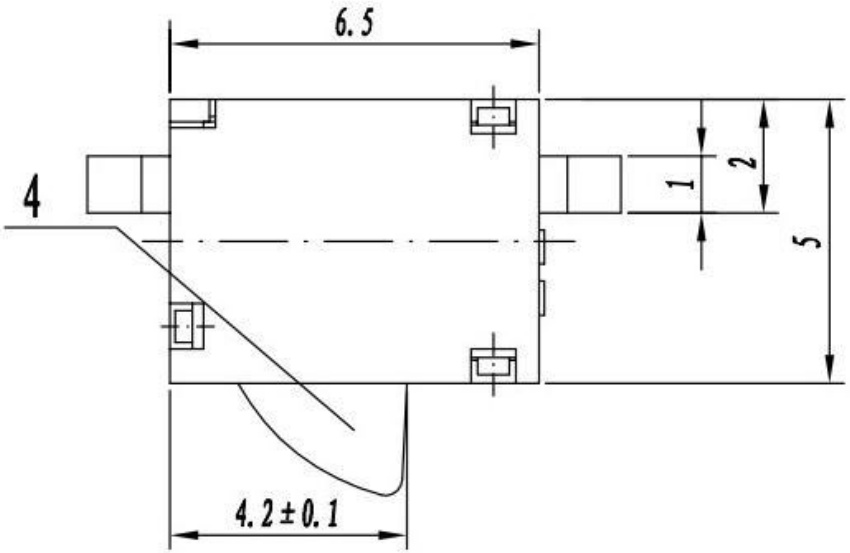

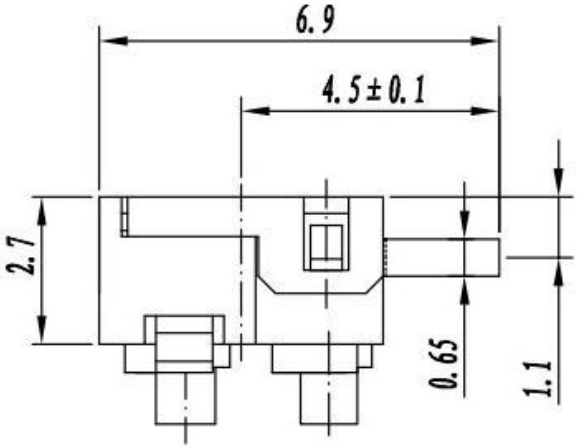

电原理图

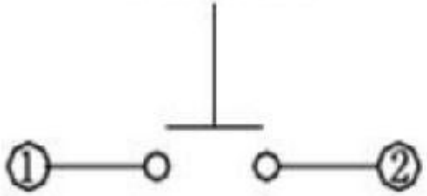

SPECIFICATIONS

Rating	DC 12V 50mA
Contact Resistance	150mΩ Max
Insulation Resistance	50MΩ Min
Operating Force	40 ±15gf
Life	50,000 cycles

NO.	PARTS	MATERIALS	QTY	FINISH
E	THERMINAL	PHOSPHOR BRONZE	4	Ag PLATED
D	CONTACT SPRING	PHOSPHOR BRONZE	1	Ag PLATED
C	COVER	PA46	1	BLACK
B	CASE	PPA	1	BLACK
A	KNOB	PA46	1	BLACK

ITEM NO.	DESCRIPTION	DRAWN	DATE
2	更新高度選項及MODLE	Jack	052115
1	新增高度選項"K"10.5mm	Jack	042115

东莞市高迪电子有限公司
Dong Guan KDRR Electronic Switch JacK Co., Ltd.

TOLERANCE UNLESS OTHERWISE STATED: Up to 5 ±0.2; Above 5 ~ 15 ±0.3; Above 15 ~ 30 ±0.4; Above 30 ~ 50 ±0.5; Angle ±0.3°

3RD. ANGEL'S | UNITS MM

DRAWN BY: Jack Lu	DATE 05/21/15	MAT'L	
CHECKED BY: Jacky Chen	DATE 05/21/15	FINISH	
APPROVED BY: Tony Kao	DATE 05/21/15	SCALE	1 : 1
		SHEET NO.	1 of 1

TITLE	SWITCH
MODLE	DETECTOR SWITCH
DWG NO.	
PART NO.	
SIZE	A4
VER	R2