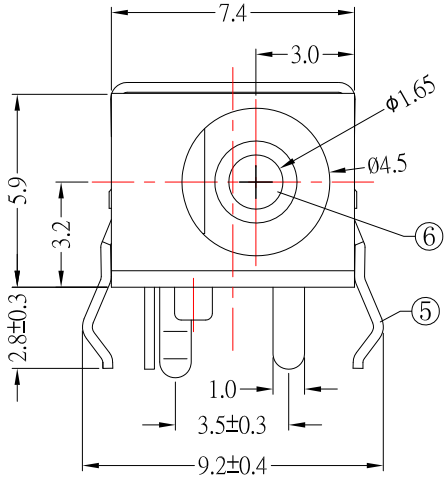

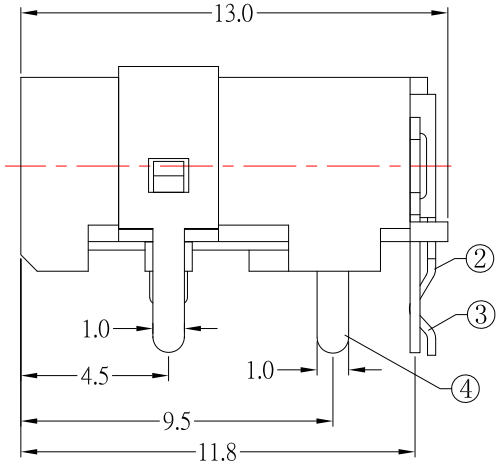

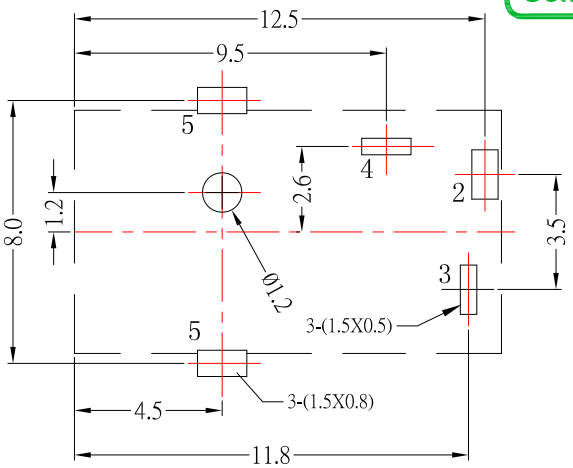

P.C.B LAYOUT
TOP VIEW

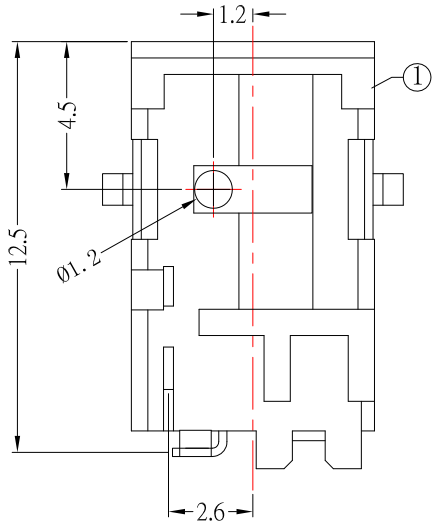

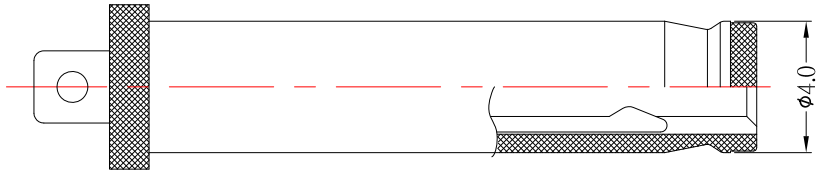

RECOMMENDED PLUG

SPECIFICATION

1.Rating ：DC 30V, 1.0A；
2.Contact resistance：≤50mΩ；
3.Insulation resistance：≥100MΩ；
4.Withstand voltage：500VAC；
5.Insertion and extraction force：3-20N;
6.life test：5,000 cycles。

MODEL NO.	DC-D030-1.65
SCHEMATIC	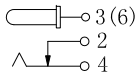

NO.	DESCRIPTION	QTY	MATERIAL	PLATING
⑥	CENTER PIN	1	BRASS	Ag-Plating
⑤	COAT	1	BRASS	Ag-Plating
④	SPRING	1	PHOSPHOR BRONZE	Ag-Plating
③	FLAT PIECE	1	BRASS	Ag-Plating
②	CURVE PIECE	1	SUS	Ag-Plating
①	HOUSING	1	PBT	

ITEM NO.	DESCRIPTION	DRAWN	DATE
1	更新尺寸	Jack	061217

东莞市高迪电子有限公司
Dong Guan KDRR Electronic Switch JacK Co., Ltd.

TOLERANCE UNLESS OTHERWISE STATED：Up to 5 ±0.2; Above 5 ~ 15 ±0.3; Above 15 ~ 30 ±0.4; Above 30 ~ 50 ±0.5; Angle ±0.3°

3RD. ANGEL'S

UNITS MM

DRAWN BY: Jack Lu	DATE 06/12/17	MAT'L		TITLE	JACK
CHECKED BY: Jacky Chen	DATE 06/12/17	FINISH		MODLE	DC JACK
APPROVED BY: Tony Kao	DATE 06/12/17	SCALE	1 : 1	DWG NO.	DC-D030-1.65-S124
		SHEET NO.	1 of 1	PART NO.	DC-D030-1.65-S124

SIZE A4
VER R1