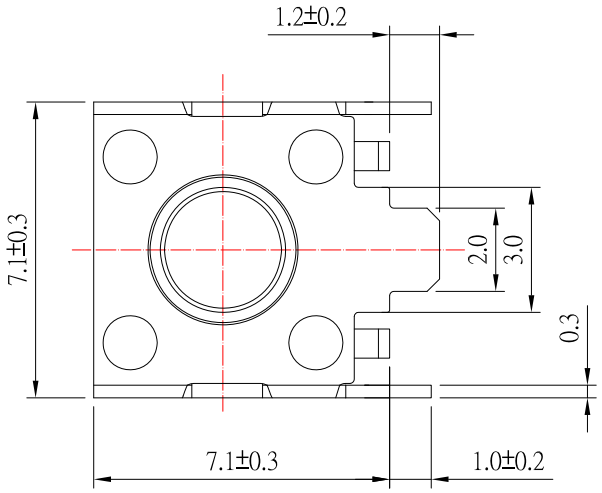

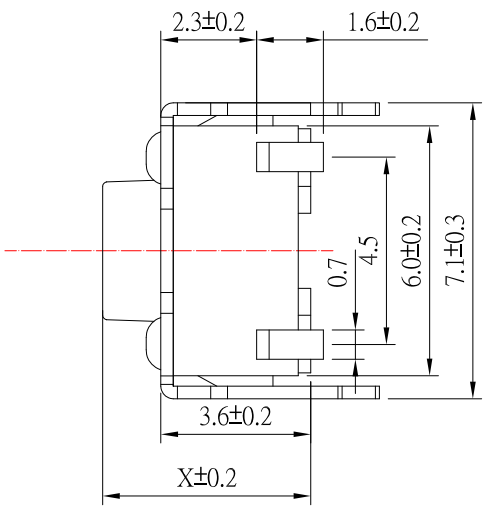

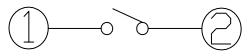

CIRCUIT DIAGRAM

MODEL NO.	TS-A02VS1	TS-A02VS1A	TS-A02VS1AL	TS-A02VS1B	TS-A02VS1C	TS-A02VS1D
X (mm)	4.30	5.00	5.50	7.00	8.00	9.50

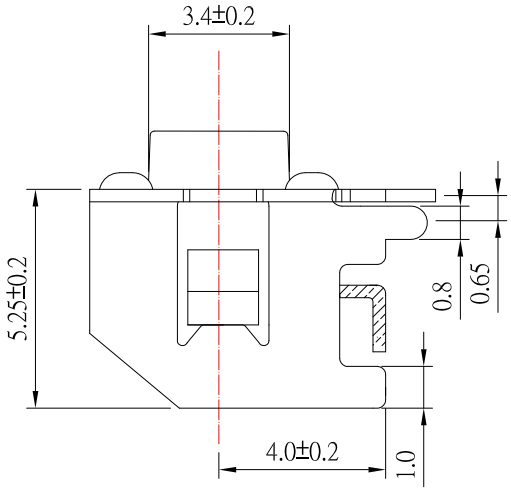

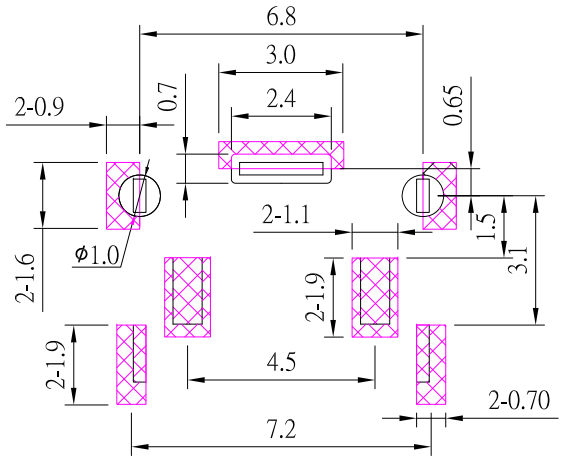

PCB LAYOUT

SPECIFICATIONS

Rating	DC 12V 50mA
Contact Resistance	100mΩ Max.
Travel	0.25 ± 0.10mm
Operating Force	160±50gf
Operating Life(cycles)	100,000

NO.	DESCRIPTION	QTY	MATERIAL	PLATING
E	COVER	1	BECU	Ag plated
D	STEM	1	NYLON	Black
C	CONTACT	1	SUS	Ag plated
B	TERMINAL	2	BRASS	Ag plated
A	BASE	1	NYLON	Black

ITEM NO.	DESCRIPTION	DRAWN	DATE
4	新增PCB LAYOUT尺寸	Jack	050520
3	更新圖面	Jack	061319
2	更新PCB LAYOUT標示	Jack	012519
1	更新尺寸	Jack	020718

东莞市高迪电子有限公司
Dong Guan KDRR Electronic Switch JacK Co., Ltd.

TOLERANCE UNLESS OTHERWISE STATED: Up to 5 ±0.2; Above 5 ~ 15 ±0.3; Above 15 ~ 30 ±0.4; Above 30 ~ 50 ±0.5; Angle ±0.3°

3RD. ANGEL'S | UNITS MM

DRAWN BY: Jack Lu	DATE 05/05/20	MAT'L	
CHECKED BY: Jacky Chen	DATE 05/05/20	FINISH	
APPROVED BY: Tony Kao	DATE 05/05/20	SCALE 1 : 1	SHEET NO. 1 of 1

TITLE	SWITCH		
MODLE	TACT SWITCH		
DWG NO.	TS-A02VS1x-2-S246	SIZE	A4
PART NO.	TS-A02VS1x-2-S246	VER	R4