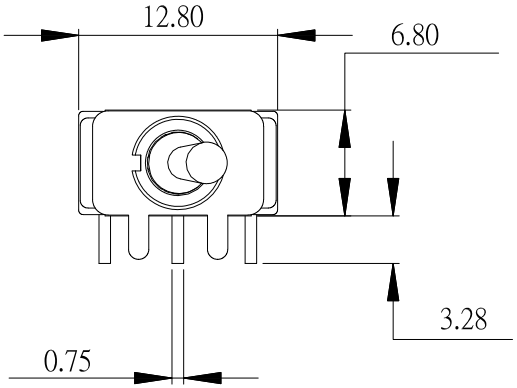


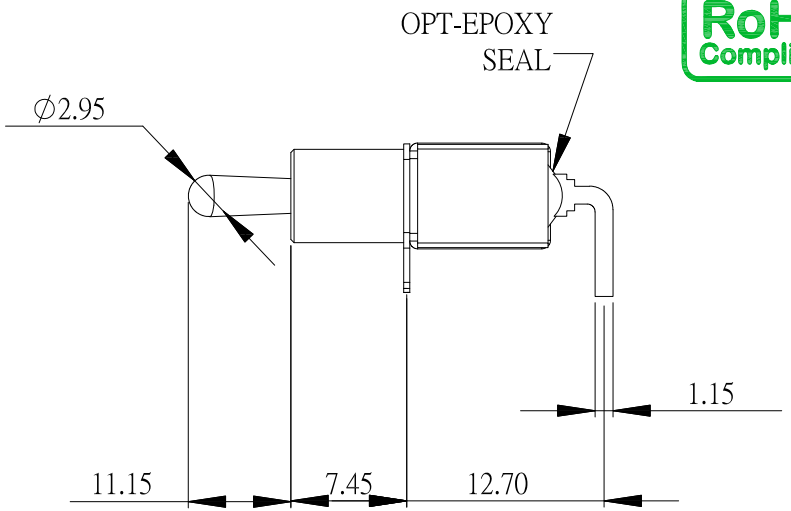


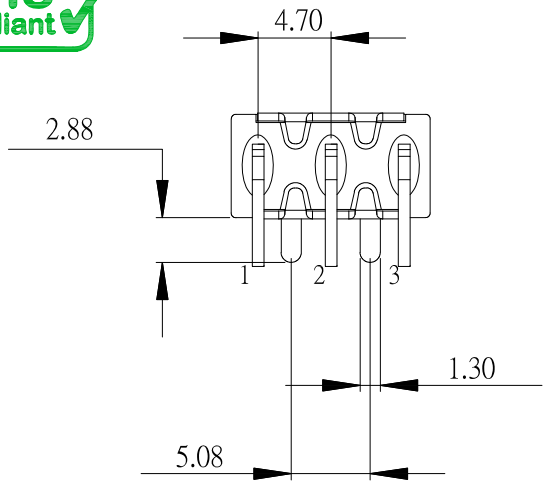


## PRODUCT IMAGE

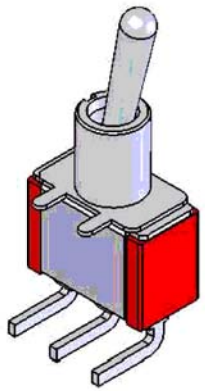

## SCHEMATIC

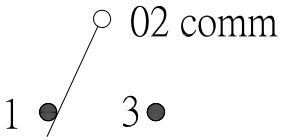


## P.C.B LAYOUT MOUNTING PATTERN

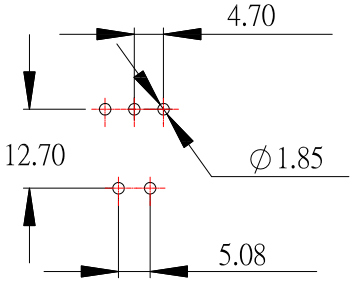


| Model No. | Switcning Position | | |
|---|---|---|---|
| M101 | ON | NONE | ON |
| M102 | ON | NONE | (ON) |
| M103 | ON | OFF | (ON) |
| M104 | (ON) | OFF | (ON) |
| M105 | ON | OFF | (ON) |
| Term Comm. | 2-3 | OPEN | 2-1 |

SPECIFICATIONS:

CONTACT RATING : 5 AMPS / 120V AC or 28V DC
2 AMPS / 250V AC or 0.4VA AMPS @ 20V ACor DC
20VELECTRICAL LIFE : 50,000 make-and-break cycles at full load.
CONTACT RESISTANCE : 10 mΩ max. initial @ 2-4 VDC
100 mA , for both coin silver and gold plated contacts.
INSULATION RESISTANCE : 1,000 MΩ min
DIELETRIC STRENGTH : 1,000 V RMS @ sea level.
OPERATING TEMPERTURE : -30˚C to 130˚C

MTAERIALS:

CASE : Dially phthalate (DAP)(UL-94V-0)
ACTUATOR : Brass,chrome plated.
BUSHING : Brass. nickel plated.
HOUSING : Stainless steel.
TERMINAL/CONTACT : Brass , witch silver or gold plated.
or gold over silver
SWITCH SUPPORT : Brass , tin plated.

| ITEM NO. | DESCRIPTION | DRAWN | DATE |
|---|---|---|---|

东莞市高迪电子有限公司
Dong Guan KDRR Electronic Switch JacK Co., Ltd.

TOLERANCE UNLESS OTHERWISE STATED : Up to 5 ±0.2; Above 5 ~ 15 ±0.3; Above 15 ~ 30 ±0.4; Above 30 ~ 50 ±0.5; Angle ±0.3˚

3RD. ANGEL'S | UNITS | MM

| | | | | | |
|---|---|---|---|---|---|
| DRAWN BY: Frank Wu | DATE 11/04/11 | MAT'L | | TITLE | SWITCH |
| CHECKED BY: Jacky Chen | DATE 11/04/11 | FINISH | | MODLE | TOGGLE ROCKER SWITCH |
| APPROVED BY: Tony Kao | DATE 11/04/11 | SCALE | 1 : 1 | DWG NO. | M101T1B4 |
| | | SHEET NO. | 1 of 1 | PART NO. | M101T1B4 |

SIZE A4 | VER A