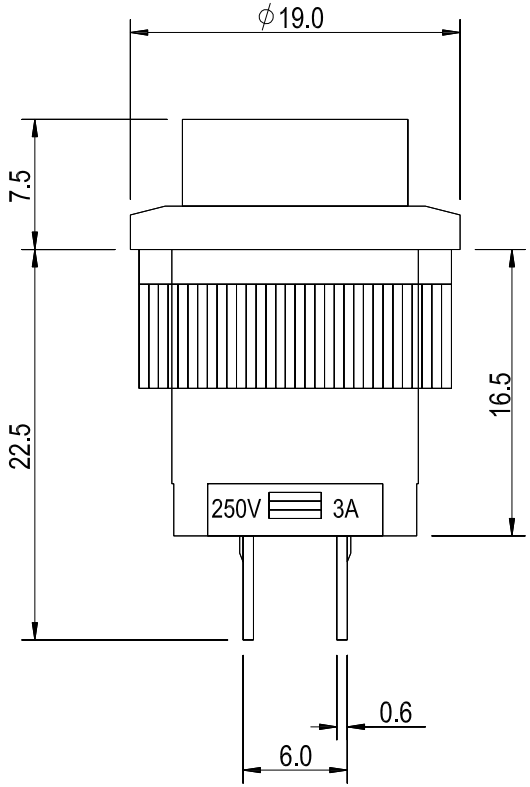

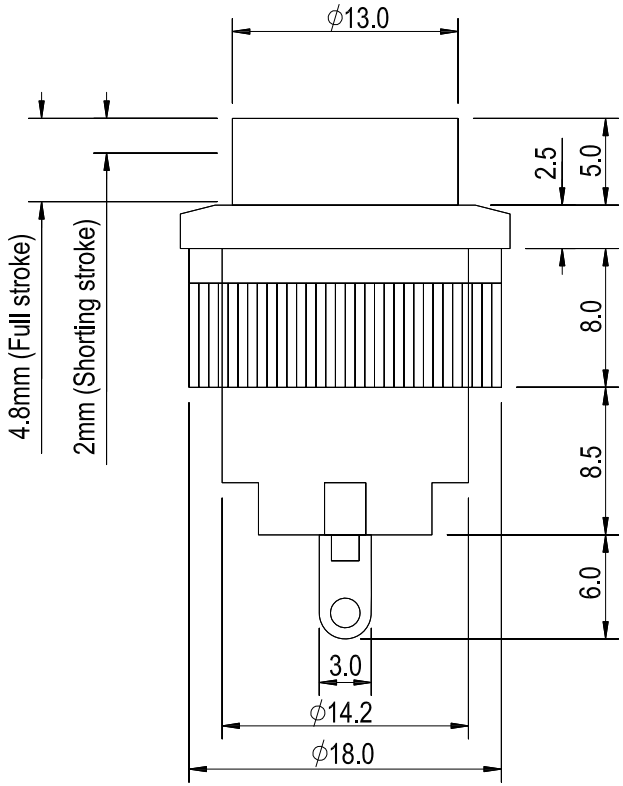

PS-008x-R-S018

L: SELF-LOCK
N: NON-LOCK

SPECIFICATIONS

1. Rating: AC 250V , 3.0A
2. Contact Resistance: 30 mΩMax
3. Dielectric Withstanding Voltage: 500 V AC / 1 minute
4. Insulation Resistance: 100 MΩ Min
5. Operating Force : 100 ± 50gf
6. Life Cycle : 10,000 cycles

NO.	PART NAME	MATERIAL	QTY.
8	CONTACT	BRASS	1
7	SPRING	STAINLESS STEEL	2
6	NUTS	PA66	1
5	TERMINAL	BRASS	2
4	SLIDER	POM	1
3	BASE	PA66	1
2	CASE	PA66	1
1	KNOB	ABS	1

ITEM NO.	DESCRIPTION	DRAWN	DATE

东莞市高迪电子有限公司
Dong Guan KDRR Electronic Switch JacK Co., Ltd.

TOLERANCE UNLESS OTHERWISE STATED :
Up to 5 ±0.2
Above 5 ~ 15 ±0.3
Above 15 ~ 30 ±0.4
Above 30 ~ 50 ±0.5
Angle ±0.3°

3RD. ANGEL'S | UNITS | MM

DRAWN BY: Jack Lu	DATE 06/13/17	MAT'L	
CHECKED BY: Jacky Chen	DATE 06/13/17	FINISH	
APPROVED BY: Tony Kao	DATE 06/13/17	SCALE	1 : 1
		SHEET NO.	1 of 1

TITLE	SWITCH		
MODLE	PUSH SWITCH		
DWG NO.	PS-008x-R-S018	SIZE	A4
PART NO.	PS-008x-R-S018	VER	R