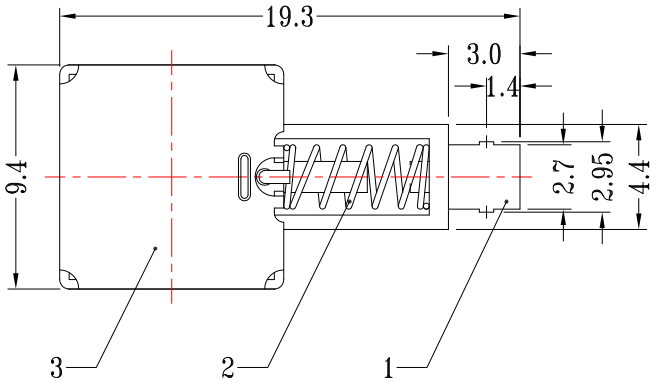

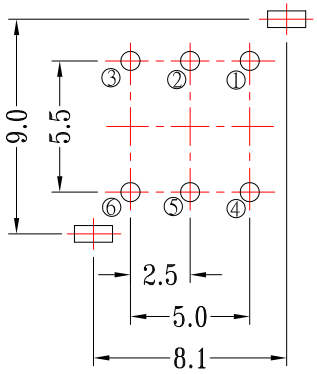

PCB LAYOUT
(TOP VIEW)

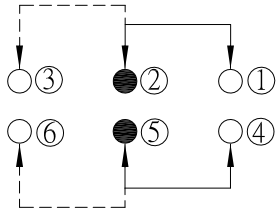

SCHEMATIC(NON-SHORTING)

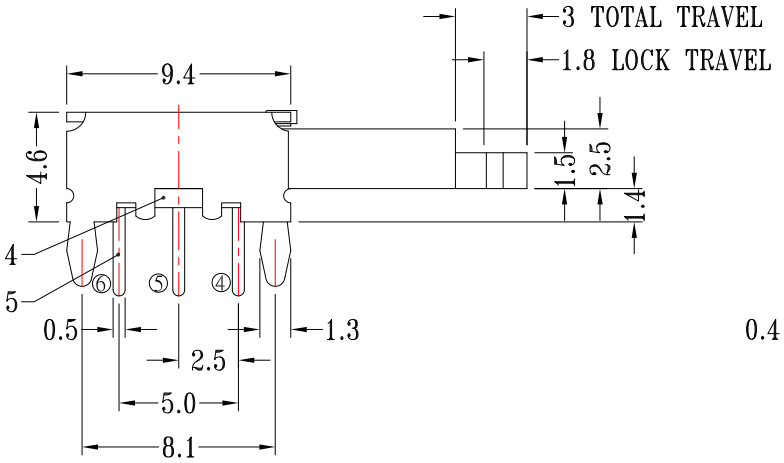

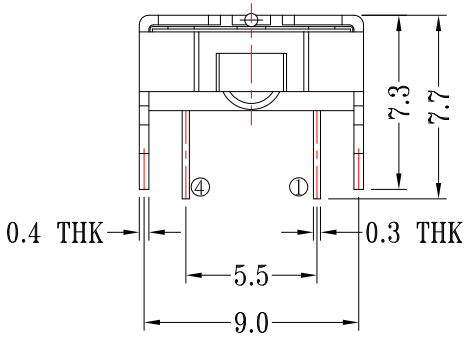

SPECIFICATIONS

1.Rating : DC 30V 0.5A
2.Circuit : 2P2T
3.Timing : Non-Shorting
4.Operating force : 250 ± 100gf
5.Life test : 10,000 cycles
6.Operating Mode : Self-Lock

NO.	PARTS	MATERIALS	Q'TY	FINISH
8	CONTACT CLIP	PBS STRIP	2	Ag PLATED
7	CAM STICK	BRASS WIRE	1	NATURAL
6	SPRING PLATE	PBS STRIP	1	NATURAL
5	TERMINAL	BRASS STRIP	6	Ag PLATED
4	BASE	PHENOLIC RESIN	1	NATURAL
3	FRAME	STEEL STRIP	1	Ni PLATED
2	SPRING	STEEL WIRE	1	NATURAL
1	KNOB	POM	1	YELLOW

ITEM NO.	DESCRIPTION	DRAWN	DATE
3	新增SPEC	Jack	102615
2	新增PIN編號	Jack	112614
1	新增Operating Mode	Jack	072514

东莞市高迪电子有限公司
Dong Guan KDRR Electronic Switch JacK Co., Ltd.

TOLERANCE UNLESS OTHERWISE STATED : Up to 5 ±0.2; Above 5 ~ 15 ±0.3; Above 15 ~ 30 ±0.4; Above 30 ~ 50 ±0.5; Angle ±0.3°

3RD. ANGEL'S | UNITS | MM

DRAWN BY: Jack Lu	DATE 10/26/15	MAT'L		TITLE	SWITCH		
CHECKED BY: Jacky Chen	DATE 10/26/15	FINISH		MODLE	PUSH SWITCH		
APPROVED BY: Tony Kao	DATE 10/26/15	SCALE	1 : 1	DWG NO.	PS-22E02-S191	SIZE	A4
		SHEET NO.	1 of 1	PART NO.	PS-22E02-S191	VER	R3