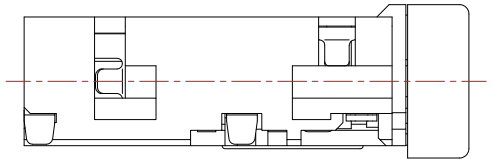

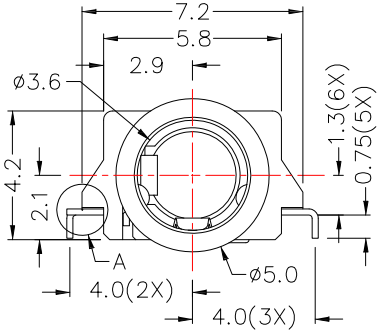

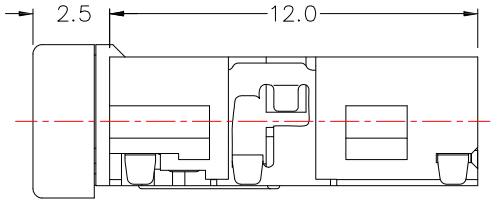

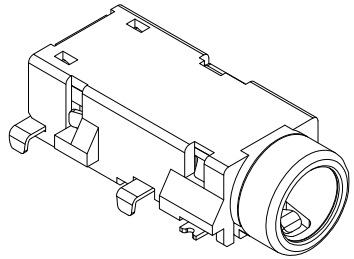

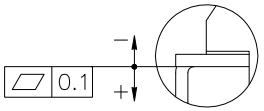

COPLANARITY A DETAIL

MODEL NO.	PJ-5346D
SCHEMATIC	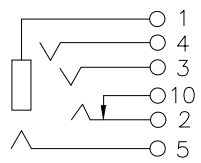

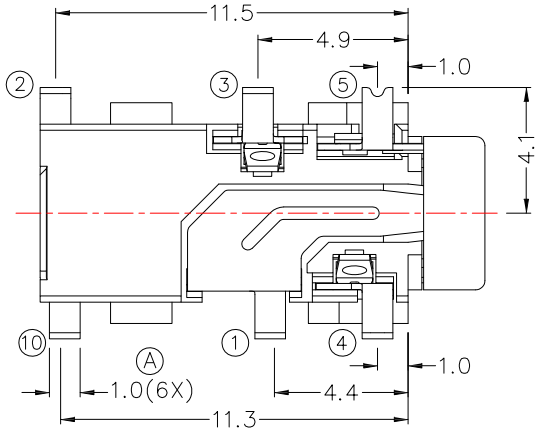

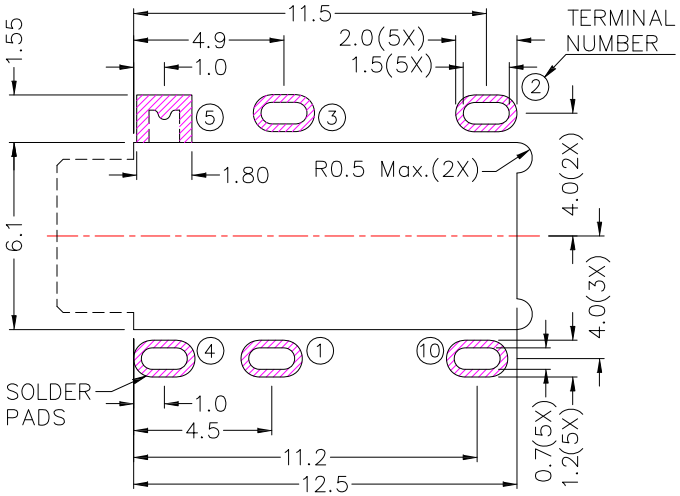

RECOMMENDED
SOLDER PAD LAYOUT
(TOP VIEW)

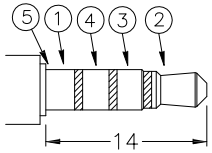

ø3.5 MATE PLUG

SPECIFICATION

1.Rating : DC 12V 1.0A
2.Contact resistance : ≤50m Ω
3.Insulation resistance : ≥100M Ω
4.Withstand voltage : 500VAC
5.Insertion and extraction force : 3-30N
6.life test : 5,000 cycles

*MATERIAL

TERMINAL 1 : PHOSPHOR BRONZE
TERMINAL 2 : PHOSPHOR BRONZE
TERMINAL 3 : PHOSPHOR BRONZE
TERMINAL 4 : PHOSPHOR BRONZE
TERMINAL 5 : STAINLESS STEEL
TERMINAL 10 : PHOSPHOR BRONZE
BUSHING : BRASS
HOUSING : PA6T

ITEM NO.	DESCRIPTION	DRAWN	DATE
1	新增SPEC	Jack	110315

东莞市高迪电子有限公司
Dong Guan KDRR Electronic Switch JacK Co., Ltd.

TOLERANCE UNLESS OTHERWISE STATED : Up to 5 ±0.2; Above 5 ~ 15 ±0.3; Above 15 ~ 30 ±0.4; Above 30 ~ 50 ±0.5; Angle ±0.3°

3RD. ANGEL'S

UNITS MM

DRAWN BY: Jack Lu	DATE 11/03/15	MAT'L	
CHECKED BY: Jacky Chen	DATE 11/03/15	FINISH	
APPROVED BY: Tony Kao	DATE 11/03/15	SCALE 1 : 1	SHEET NO. 1 of 1

TITLE	JACK		
MODLE	PHONE JACK		
DWG NO.	PJ-5346D	SIZE	A4
PART NO.	PJ-5346D	VER	R1