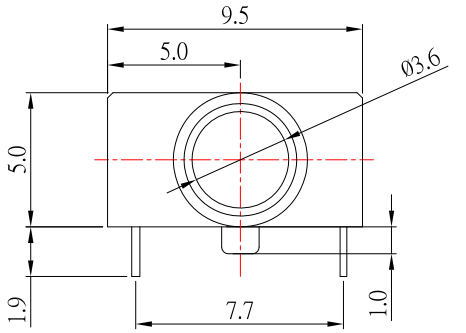


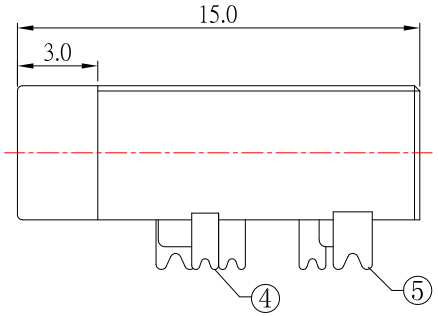


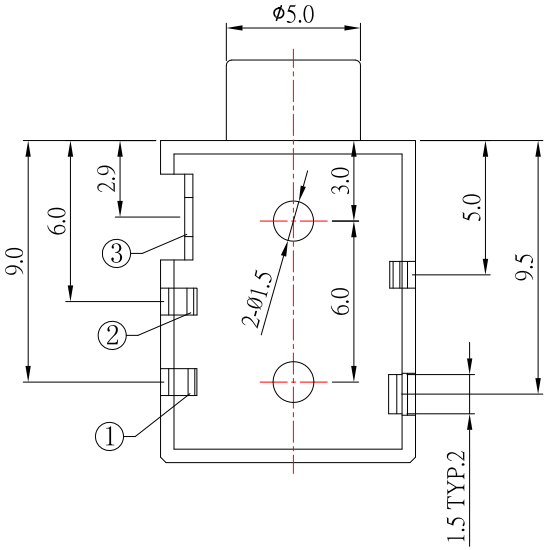


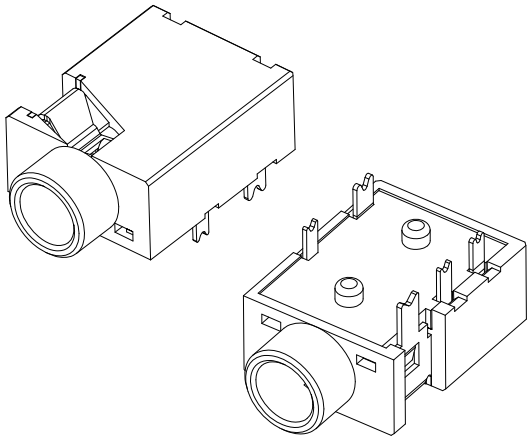

## P.C.B LAYOUT
## TOP VIEW

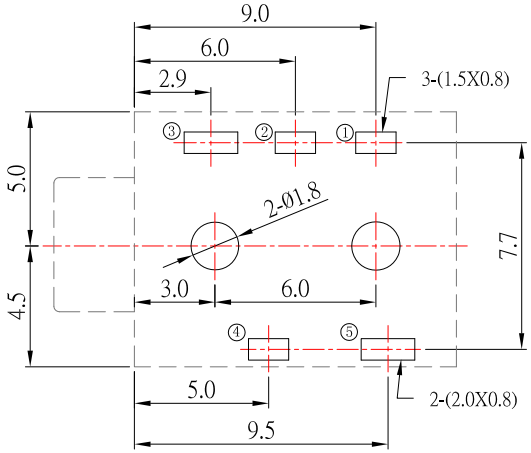


## SPECIFICATION

1.Rating ：DC 30V 0.5A；

2.Contact resistance：≤0.05Ω；

3.Insulation resistance：≥100MΩ (DC250V)；

4.Withstand voltage：500VAC ；

5.Insertion and extraction force：3-20N;

6.life test：5,000 cycles。

## SCHEMATIC

| PJ-3675-S125 | PJ-3674B-S125 | PJ-3674A-S125 | PJ-3673-S125 | PJ-3673A-S125 |
|---|---|---|---|---|
| 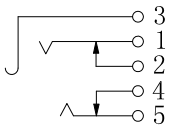 | 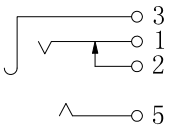 | 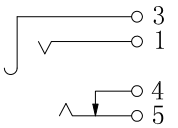 | 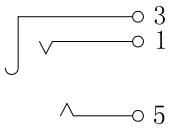 | 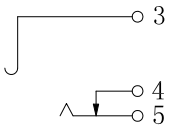 |

| ITEM NO. | DESCRIPTION | DRAWN | DATE |
|---|---|---|---|
| | | | |

东莞市高迪电子有限公司
Dong Guan KDRR Electronic Switch JacK Co., Ltd.

TOLERANCE UNLESS OTHERWISE STATED：
Up to 5 ±0.2
Above 5 ~ 15 ±0.3
Above 15 ~ 30 ±0.4
Above 30 ~ 50 ±0.5
Angle ±0.3°

3RD. ANGEL'S

UNITS MM

| | | | | | | | |
|---|---|---|---|---|---|---|---|
| DRAWN BY: Jack Lu | DATE 04/23/13 | MAT'L | | TITLE | JACK | | |
| CHECKED BY: Jacky Chen | DATE 04/23/13 | FINISH | | MODLE | PHONE JACK | | |
| APPROVED BY: Tony Kao | DATE 04/23/13 | SCALE | 1 : 1 | DWG NO. | PJ-367x-S125 | SIZE | A4 |
| | | SHEET NO. | 1 of 1 | PART NO. | PJ-367x-S125 | VER | A0 |