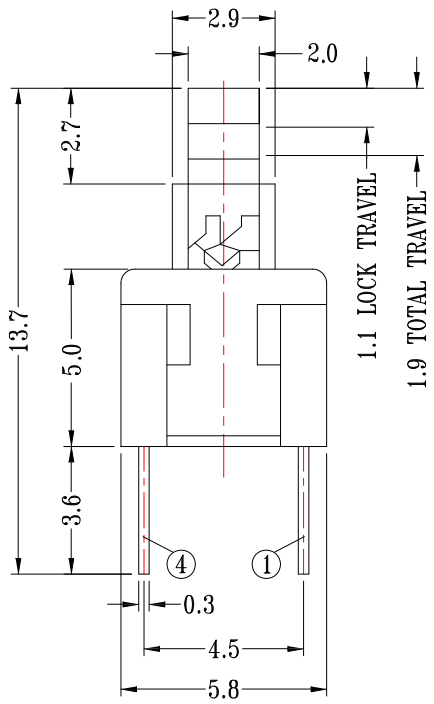

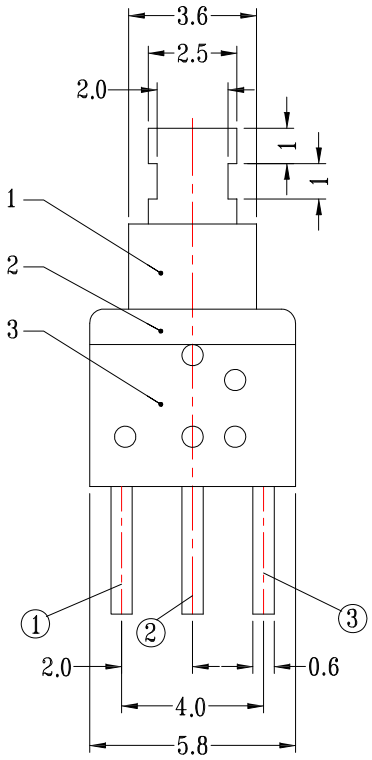

RoHS Compliant

SPECIFICATIONS:

1.RATTING: 12V DC / 0.2A

2.CIRCUIT: 2C-2P

3.TIMING: NON-SHORTING

4.OPERATING MODE: SELF-LOCK : PS-D16L-S191

Non-LOCK : PS-D16NL-S191

5.OPERATING FORCE: 250±100 gf

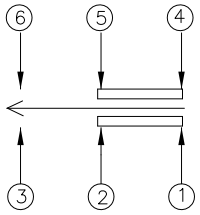

CIRCUIT DIAGRAM

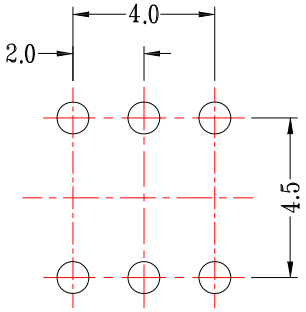

P.C.B LAYOUT
BOTTOM VIEW

NO.	PARTS	MATERIALS	Q'TY	FINISH
7	CONTACT	PHOSPHOR BRONZE	1	Ag PLATED
6	TERMINAL	BRASS	6	Ag PLATED
5	SPRING	SUS	1	NATURAL
4	CAM STICK	SUS	1	NATURAL
3	CASE	PA66	1	GREY
2	COVER	POM	1	BLACK
1	KNOB	POM	1	WHITE

ITEM NO.	DESCRIPTION	DRAWN	DATE
2	新增材質	Jack	032514
1	更新圖面及SPEC	Jack	021914

东莞市高迪电子有限公司
Dong Guan KDRR Electronic Switch JacK Co., Ltd.

TOLERANCE UNLESS OTHERWISE STATED : Up to 5 ±0.2; Above 5 ~ 15 ±0.3; Above 15 ~ 30 ±0.4; Above 30 ~ 50 ±0.5; Angle ±0.3°

3RD. ANGEL'S

UNITS MM

DRAWN BY: Jack Lu	DATE 03/25/14	MAT'L	
CHECKED BY: Jacky Chen	DATE 03/25/14	FINISH	
APPROVED BY: Tony Kao	DATE 03/25/14	SCALE 1 : 1	SHEET NO. 1 of 1

TITLE	SWITCH		
MODLE	PUSH SWITCH		
DWG NO.	PS-D16x-S191	SIZE	A4
PART NO.	PS-D16x-S191	VER	A2