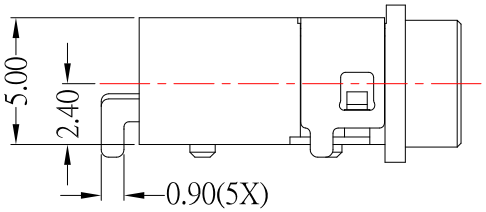

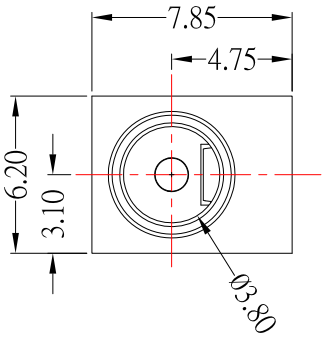

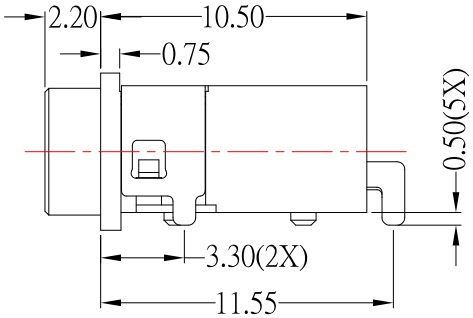

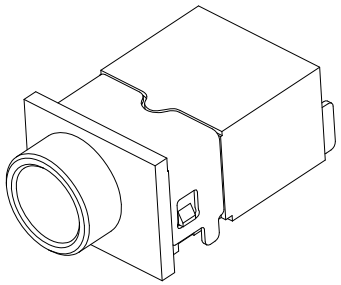

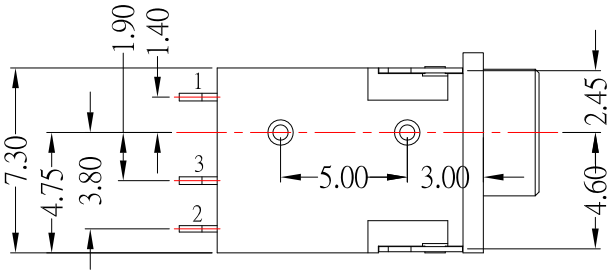

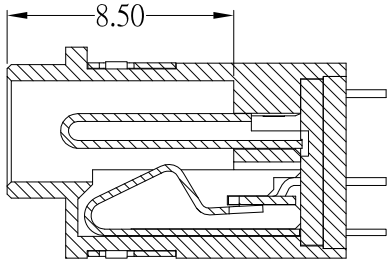

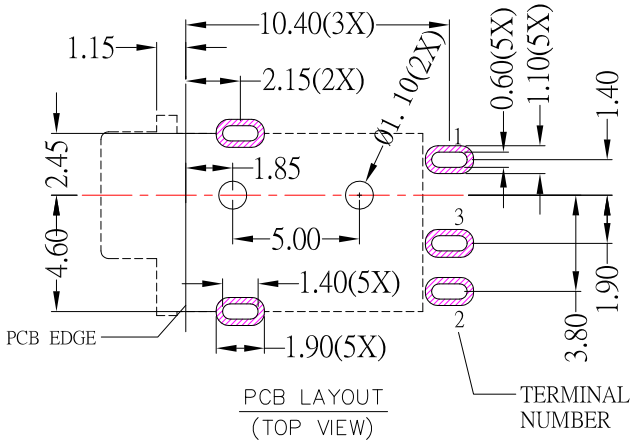

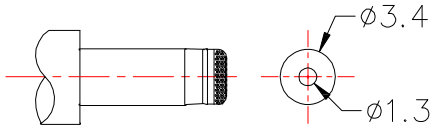

DC MATE PLUG

MODEL NO.	DC-WP1001HS-1.3
SCHEMATIC	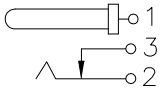
CENTER PIN	Ø1.3mm

※MATERIAL

TERMINAL 1	:BRASS(Matte Gold Plated)
TERMINAL 2	:COPPER ALLOY(Matte Gold Plated)
TERMINAL 3	:BRASS(Matte Gold Plated)
SHIELD	:BRASS(Ni Plated)
HOUSING	:PA10T
COVER	:PA10T

SPECIFICATION

1.Rating ：DC 16V 3.5A
2.Contact resistance：≤50mΩ
3.Insulation resistance：≥100MΩ
4.Insertion and extraction force：3-30N
5.life test：5,000 cycles
6.Waterproof Lever :IPX7

ITEM NO.	DESCRIPTION	DRAWN	DATE
4	更新為A0版	Jack	052417
3	新增PIN編號	Jack	030617
2	新增剖面圖	Jack	011117
1	更新材質鍍層	Jack	122316

东莞市高迪电子有限公司
Dong Guan KDRR Electronic Switch JacK Co., Ltd.

TOLERANCE UNLESS OTHERWISE STATED : Up to 5 ±0.2; Above 5 ~ 15 ±0.3; Above 15 ~ 30 ±0.4; Above 30 ~ 50 ±0.5; Angle ±0.3°

3RD. ANGEL'S | UNITS MM

DRAWN BY: Jack Lu	DATE 05/24/17	MAT'L	
CHECKED BY: Jacky Chen	DATE 05/24/17	FINISH	
APPROVED BY: Tony Kao	DATE 05/24/17	SCALE 1 : 1	SHEET NO. 1 of 1

TITLE	JACK		
MODLE	DC JACK 防水型		
DWG NO.	DC-WP1001HS-1.3	SIZE	A4
PART NO.	DC-WP1001HS-1.3	VER	A0