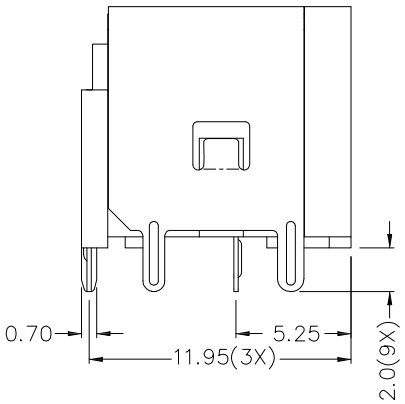

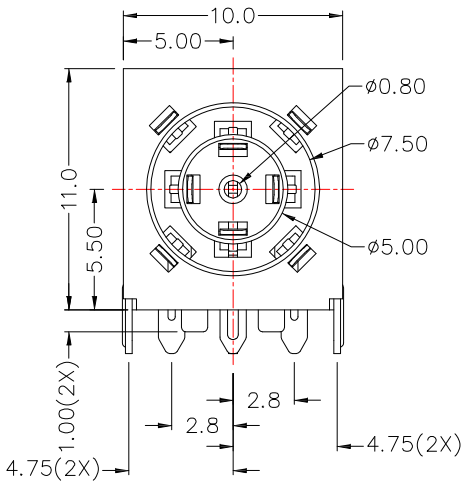

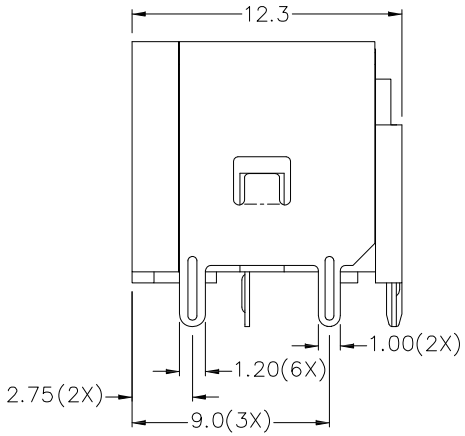

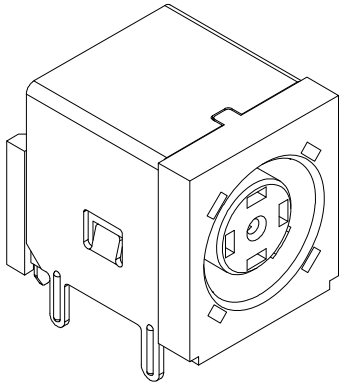

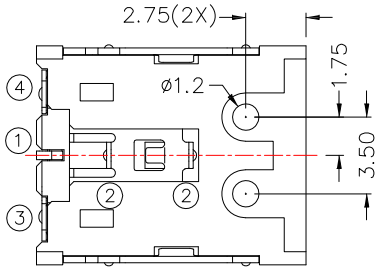

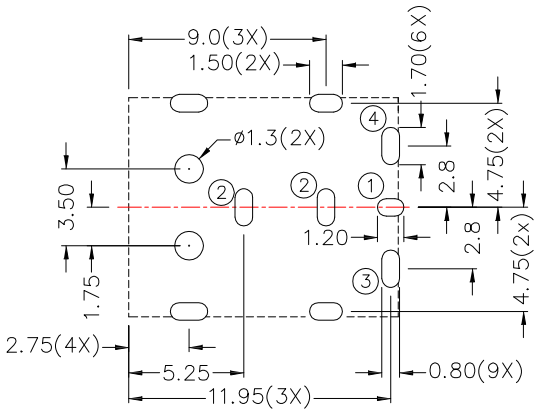

P.C.B LAYOUT MOUNTING PATTERN
(TOP VIEW)

DC MATE PLUG

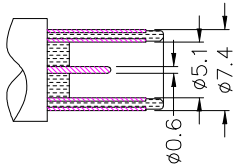

MODEL NO.	DC-093HS
SCHEMATIC	4 (V+), 3, 1(S), 2(V-)

*MATERIAL

TERMINAL 1 :PHOSPHOR BRONZE
TERMINAL 2 :PHOSPHOR BRONZE
TERMINAL 3 :PHOSPHOR BRONZE
TERMINAL 4 :PHOSPHOR BRONZE
SPRING :STAINLESS STEEL
SHIELD :BRASS
HOUSING :PA6T

SPECIFICATION

1.Rating :DC 20V 8.0A
2.Contact resistance :≤50mΩ
3.Insulation resistance :≥100MΩ
4.Withstand voltage :500VAC
5.Insertion and extraction force :3-30N
6.life test :5,000 cycles

ITEM NO.	DESCRIPTION	DRAWN	DATE
1	新增SPEC	Jack	081214

东莞市高迪电子有限公司
Dong Guan KDRR Electronic Switch JacK Co., Ltd.

TOLERANCE UNLESS OTHERWISE STATED: Up to 5 ±0.2; Above 5 ~ 15 ±0.3; Above 15 ~ 30 ±0.4; Above 30 ~ 50 ±0.5; Angle ±0.3°

3RD. ANGEL'S | UNITS MM

DRAWN BY: Jack Lu	DATE 08/12/14	MAT'L		TITLE	JACK		
CHECKED BY: Jacky Chen	DATE 08/12/14	FINISH		MODLE	DC JACK		
APPROVED BY: Tony Kao	DATE 08/12/14	SCALE	1 : 1	DWG NO.	DC-093HS-0.6	SIZE	A4
		SHEET NO.	1 of 1	PART NO.	DC-093HS-0.6	VER	R1