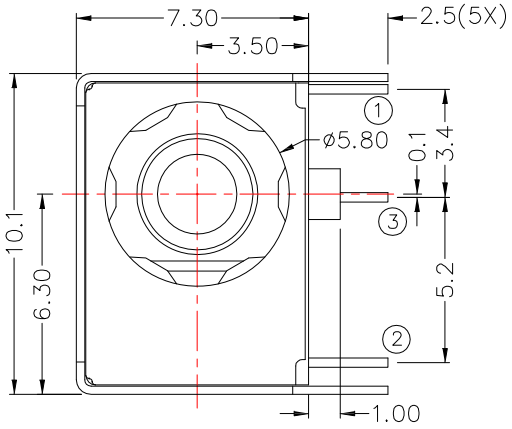


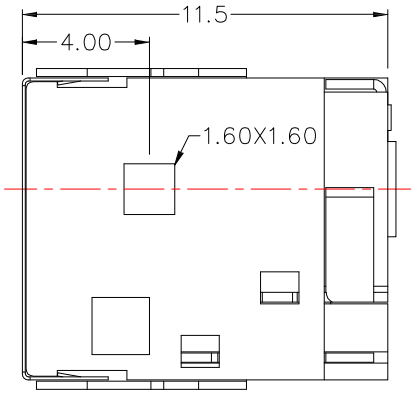


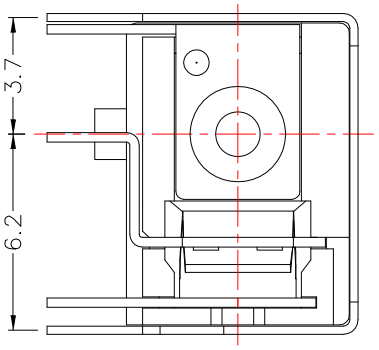


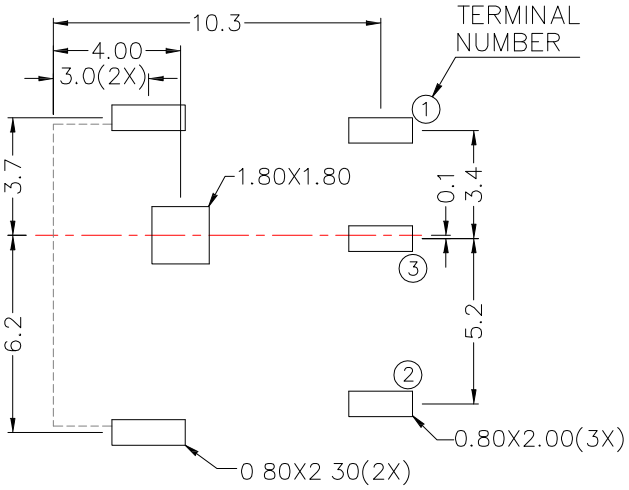


P.C.B LAYOUT
BOTTOM VIEW

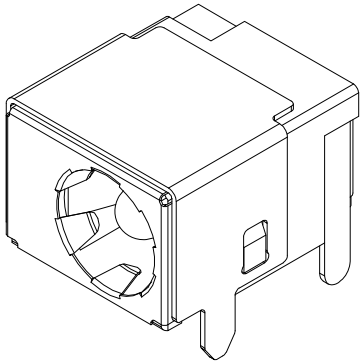

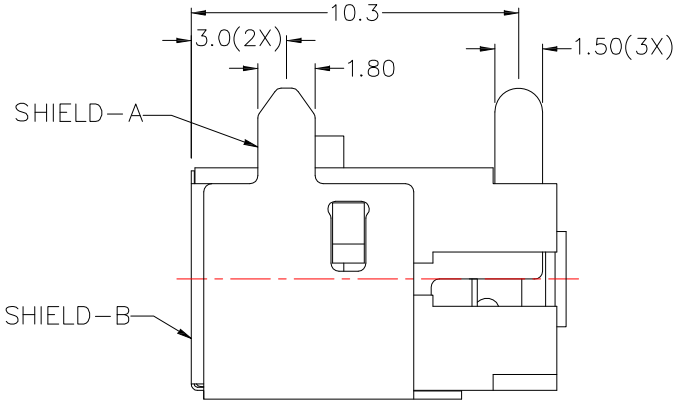


| MODEL NO. | DC-069HS-x |
|---|---|
| SCHEMATIC | 1<br>3<br>2 |
| CENTER PIN | ϕ2mm |
| | ϕ2.5mm |

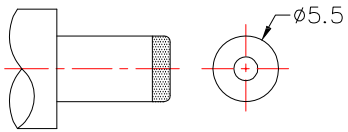


DC MATE PLUG

## ✳ MATERIAL

CENTRE PIN : COPPER
TERMINAL 1 : BRASS
TERMINAL 2 : PHOSPHOR BRONZE
TERMINAL 3 : BRASS
SHIELD－A : BRASS
SHIELD－B : STAINLESS STEEL
HOUSING : PBT

## SPECIFICATION

1.Rating ：DC 16V 5.0A；
2.Contact resistance：≤50mΩ；
3.Insulation resistance：≥100MΩ (DC500V)；
4.Withstand voltage：500VAC ；
5.Insertion and extraction force：3-30N;
6.life test：5,000 cycles。

| ITEM NO. | DESCRIPTION | DRAWN | DATE |
|---|---|---|---|
| 1 | 更新SPEC及材質 | Jack | 071014 |

东莞市高迪电子有限公司
Dong Guan KDRR Electronic Switch JacK Co., Ltd.

TOLERANCE UNLESS OTHERWISE STATED : Up to 5 ±0.2; Above 5 ~ 15 ±0.3; Above 15 ~ 30 ±0.4; Above 30 ~ 50 ±0.5; Angle ±0.3°

3RD. ANGEL'S | UNITS | MM

| | | | | | | | |
|---|---|---|---|---|---|---|---|
| DRAWN BY: Jack | DATE 07/10/14 | MAT'L | | TITLE | JACK | | |
| CHECKED BY: Jacky Chen | DATE 07/10/14 | FINISH | | MODLE | DC JACK | | |
| APPROVED BY: Tony Kao | DATE 07/10/14 | SCALE | 1 : 1 | DWG NO. | DC-069HS-x | SIZE | A4 |
| | | SHEET NO. | 1 of 1 | PART NO. | DC-069HS-x | VER | R1 |