# SUA-110E7-30xx-S277

鍍層厚度 :

| |
|---|
| Blank : 1u" |
| 2 : 15u" |
| 3 : 30u" |

HOUSING :

| |
|---|
| Blank : Blue |
| K : BLack |

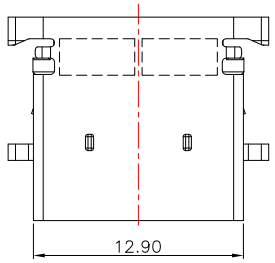


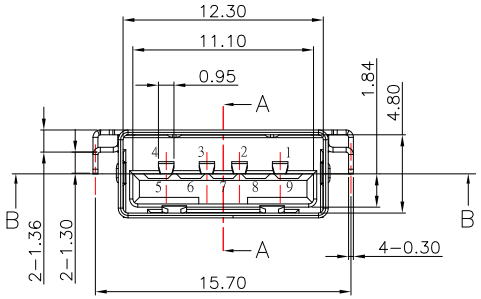


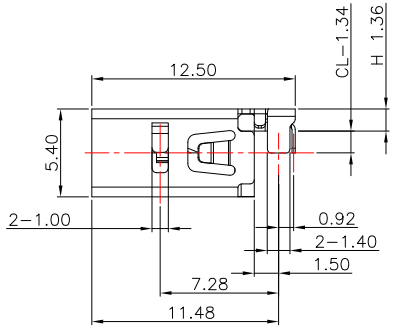


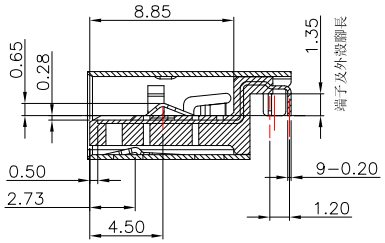


SECTION A-A

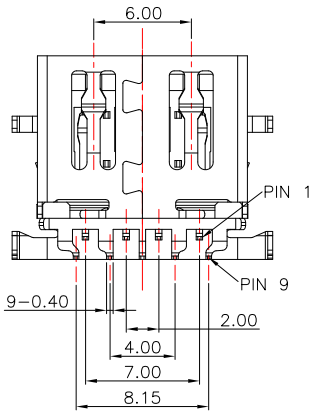


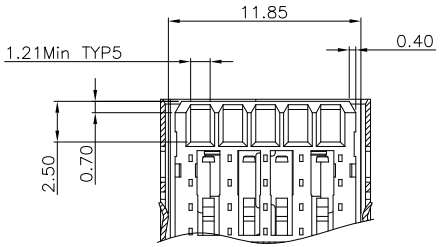


SECTION B-B

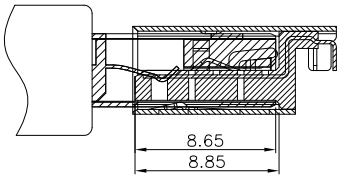


CONNECTOR MATEING

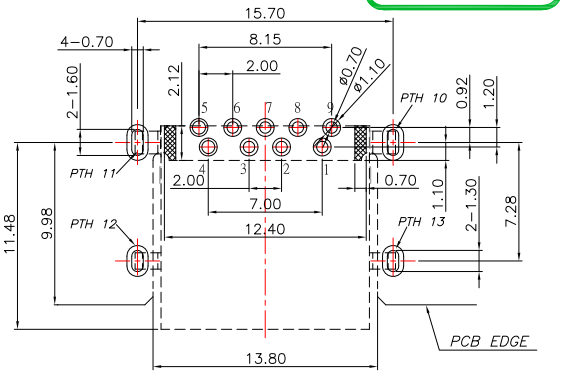


## RECOMMENDED PCB LAYOUT TOP VIEW

NOTE:

1.MATERIAL:

1.1 Housing: High Temperature Plastic,

1.2 Contact: Copper Alloy

1.3 Shell: SUS

2.Finish:

2.1 Contact: Plated Gold in Mating Area ;
Tin Plated on Solder Balls ;
Nickel under plated overall

2.2 Shell: Nickel under Plated surface layer

3.SPECIFICATION:

3.1 Rate: 30V DC , 1.5 A

3.2 Insulator Resistance:100MΩ Min

3.3 Dielectric Strength: 500V AC

3.4 Contact Resistance: 30mΩ Max

3.5 Operation Temperature: -55˚C ~ +85˚C

3.6 Insertion Force: 35 N

3.7 Extraction Force: 10 N

| ITEM NO. | DESCRIPTION | DRAWN | DATE |
|---|---|---|---|
| | | | |

东莞市高迪电子有限公司
Dong Guan KDRR Electronic Switch JacK Co., Ltd.

TOLERANCE UNLESS OTHERWISE STATED :

| | |
|---|---|
| Up to 5 | ±0.2 |
| Above 5 ~ 15 | ±0.3 |
| Above 15 ~ 30 | ±0.4 |
| Above 30 ~ 50 | ±0.5 |
| Angle | ±0.3° |

3RD. ANGEL'S | UNITS | MM

| | | | | | | | |
|---|---|---|---|---|---|---|---|
| DRAWN BY: Jack Lu | DATE 06/15/17 | MAT'L | | TITLE | CONNECTOR | | |
| CHECKED BY: Jacky Chen | DATE 06/15/17 | FINISH | | MODLE | USB AF 3.0 DIP 沉板 , 板上H:1.36mm L:12.5 , 無捲邊反向 | | |
| APPROVED BY: Tony Kao | DATE 06/15/17 | SCALE | 1 : 1 | DWG NO. | SUA-110E7-30xx-S277 | SIZE | A4 |
| | | SHEET NO. | 1 of 1 | PART NO. | SUA-110E7-30xx-S277 | VER | R |