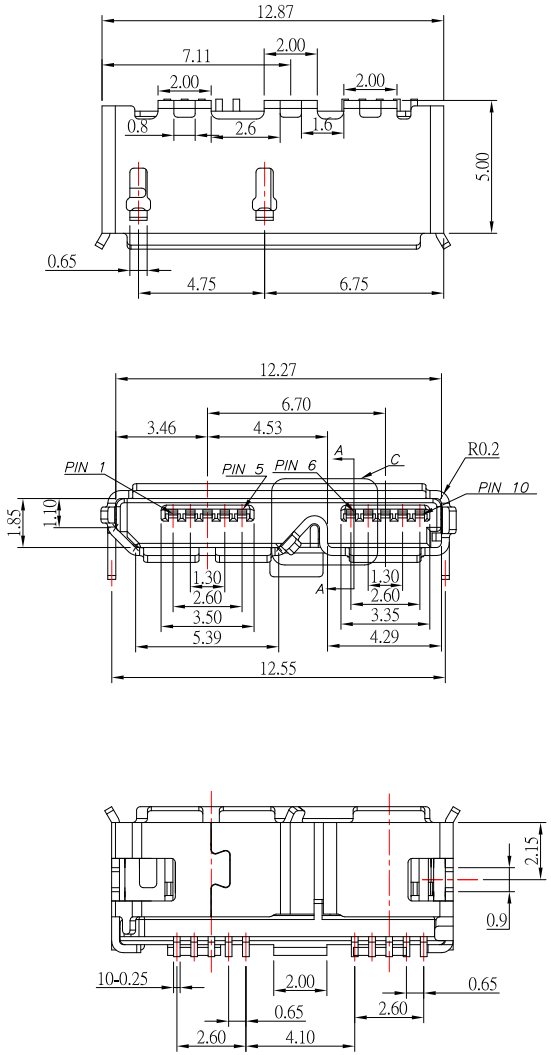

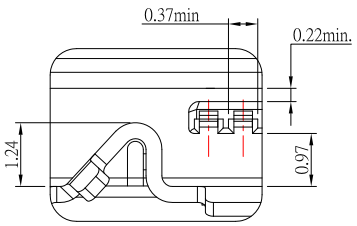

Detail C(2:1)

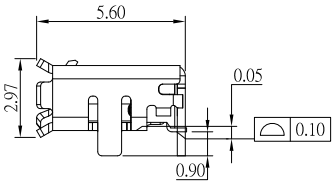

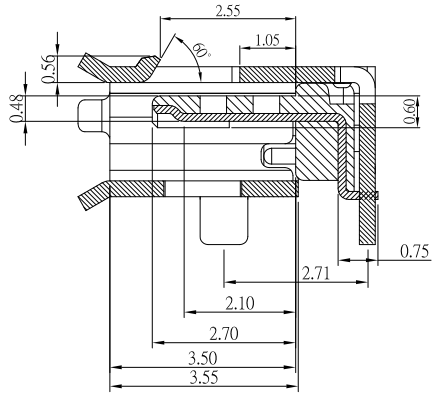

SECTION "A–A"(2:1)

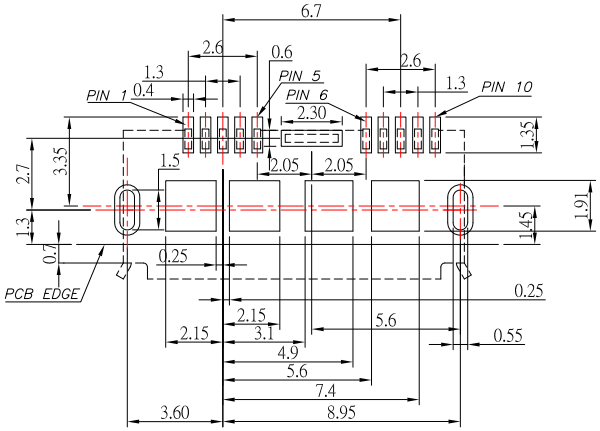

P.C.B LAYOUT MOUNTING PATTERN

MRUSB-10BD1B-30x-S277

鍍層厚度 :

Blank : 1u"
2 : 15u"
3 : 30u"

Pin Number	Signal Name
1	VBUS Power
2	D-
3	D+
4	ID
5	GND
6	MicB_SSTX-
7	MicB_SSTX+
8	GND_DRAIN
9	MicB_SSRX-
10	MicB_SSRX+

NOTE:

1.MATERIAL:

1.1 INSULATOR: LCP, UL 94V-0,Black

1.2 CONTACT: BRASS

1.3 SHELL: SUS304

2.Finish:

2.1 CONTACT: PLATED GOLD IN MATING AREA ;
TIN PLATED ON SOLDER BALLS ;
NICKEL UNDER PLATED OVERALL

2.2 SHELL: NICKEL UNDER PLATED SURFACE LAYER

ITEM NO.	DESCRIPTION	DRAWN	DATE
3	新增pcb layout尺寸及更新外殼腳距離尺寸	Jack	031815
2	新增pin定義及新增尺寸	Jack	031715
1	新增pin定義	Jack	031315

东莞市高迪电子有限公司
Dong Guan KDRR Electronic Switch JacK Co., Ltd.

TOLERANCE UNLESS OTHERWISE STATED : Up to 5 ±0.2; Above 5 ~ 15 ±0.3; Above 15 ~ 30 ±0.4; Above 30 ~ 50 ±0.5; Angle ±0.3°

3RD. ANGEL'S | UNITS | MM

DRAWN BY: Jack Lu	DATE 03/18/15	MAT'L		TITLE	CONNECTOR
CHECKED BY: Jacky Chen	DATE 03/18/15	FINISH		MODLE	MICRO 3.0 B/F DIPX3 , 腳長:0.9mm
APPROVED BY: Tony Kao	DATE 03/18/15	SCALE	1 : 1	DWG NO.	MRUSB-10BD1B-30x-S277
		SHEET NO.	1 of 1	PART NO.	MRUSB-10BD1B-30x-S277

SIZE A4 | VER R3