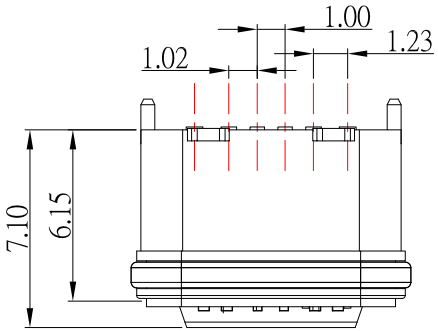

A5	CC1	B12	GND
A9	VBUS	B9	VBUS
A12	GND	B5	CC2
PIN	SIGNAL NAME	PIN	SIGNAL NAME

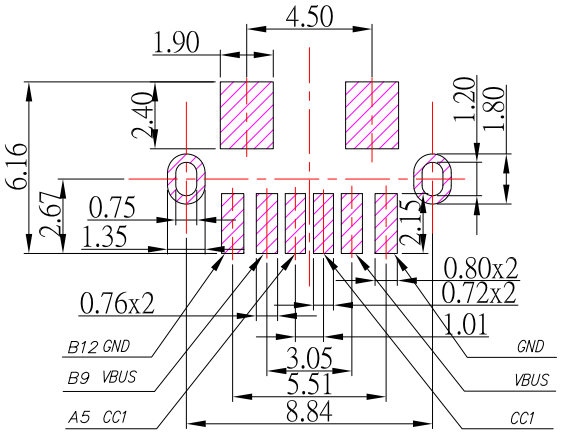

P.C.B LAYOUT MOUNTING PATTERN

IPX7

RoHS Compliant

SBC-WP060V-20x-S347

鍍層厚度 :

Blank : 1u"
2 : 15u"
3 : 30u"

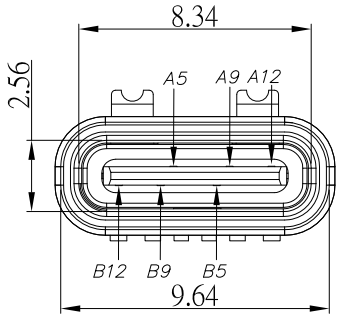

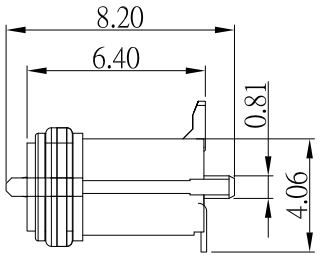

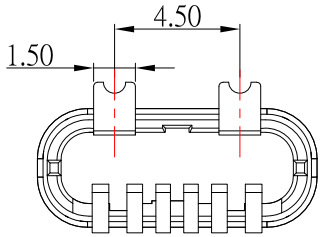

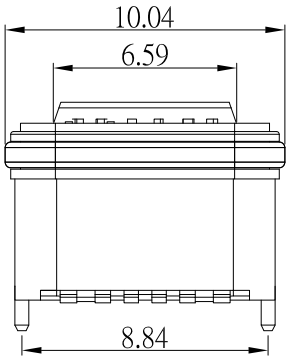

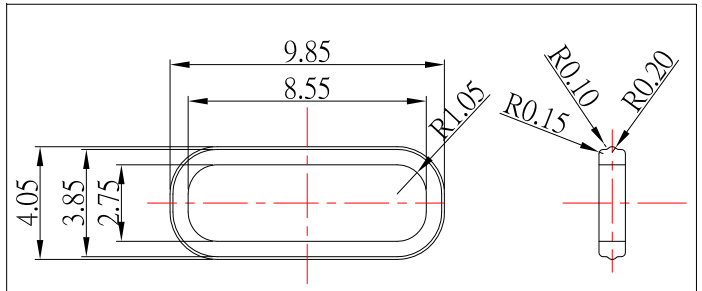

搭配:PT-ORING-10-S347

SPECIFICATIONS

Electrical:

1. Rating: 3.0A
2. Contact Resistance: 40 mΩ Max
3. Insulation Resistance: 100 MΩ Min
4. Dielectric Withstanding Voltage: 100V AC

Mechanical:

1. Connector Mate and Unmate Force
   - 1.1 Mate force: 5~20 N
   - 1.2 Unmate force: 8~20 N

Material:

1. Housing: LCP
2. Contact: Phosphor Bronze
3. Shell: Zinc Alloy

Finish:

1. Contact: Plated Gold in Mating Area ;
   Tin Plated on Solder Balls ;
   Nickel under plated overall
2. Shell: Nickel under Plated surface layer

ITEM NO.	DESCRIPTION	DRAWN	DATE
2	更新PIN定義	Jack	031320
1	新增防水圈尺寸圖	Jack	121919

东莞市高迪电子有限公司
Dong Guan KDRR Electronic Switch JacK Co., Ltd.

TOLERANCE UNLESS OTHERWISE STATED : Up to 5 ±0.2; Above 5 ~ 15 ±0.3; Above 15 ~ 30 ±0.4; Above 30 ~ 50 ±0.5; Angle ±0.3°

3RD. ANGEL'S | UNITS | MM

DRAWN BY: Jack Lu	DATE 03/13/20	MAT'L	
CHECKED BY: Jacky Chen	DATE 03/13/20	FINISH	
APPROVED BY: Tony Kao	DATE 03/13/20	SCALE 1 : 1	SHEET NO. 1 of 1

TITLE	CONNECTOR		
MODLE	USB C TYPE 2.0 Female 防水型		
DWG NO.	SBC-WP060V-20x-S347	SIZE	A4
PART NO.	SBC-WP060V-20x-S347	VER	R2