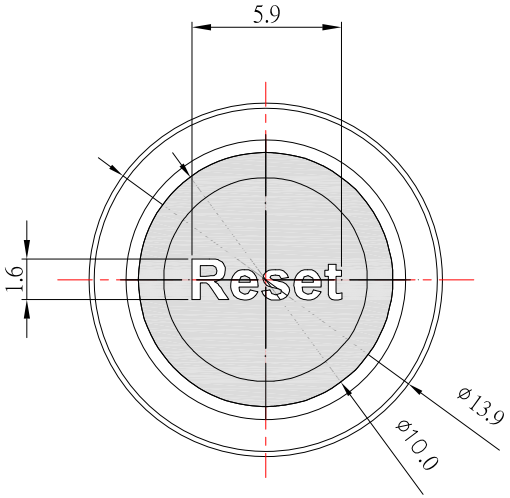

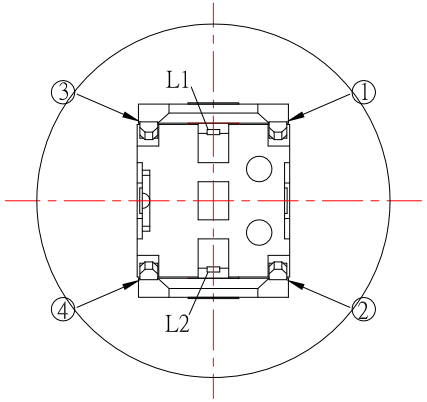

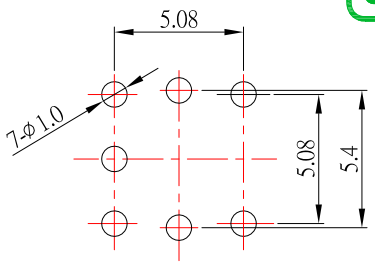

P.C.B LAYOUT

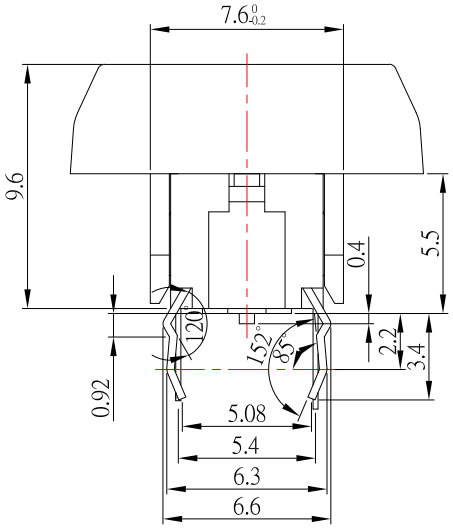

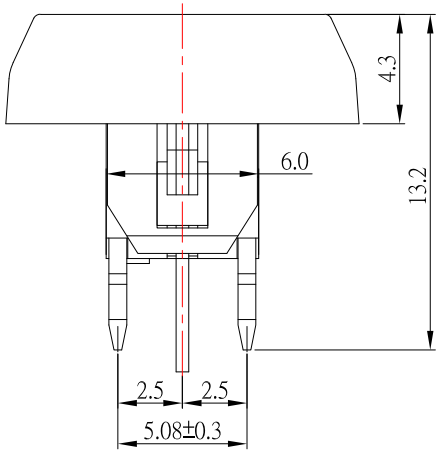

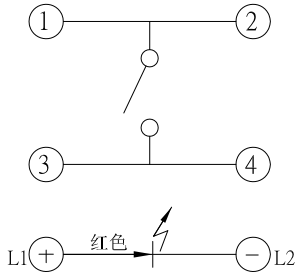

CIRCUIT DIAGRAM

NO.	DESCRIPTION	QTY	MATERIAL	PLATING
7	LED	1		Red
6	CAP SLEEVE	1	PA66	Black
5	CAP	1	ABS / PC	plated Cr
4	CONTACT	1	PHOSPHOR BRONZE	Ag plated
3	TERMINAL	4	BRASS	Ag plated
2	CASE	1	Nylon+FG	Black
1	KNOB	1	Nylon+FG	White

ITEM NO.	DESCRIPTION	DRAWN	DATE

东莞市高迪电子有限公司
Dong Guan KDRR Electronic Switch JacK Co., Ltd.

TOLERANCE UNLESS OTHERWISE STATED :
Up to 5 ±0.2
Above 5 ~ 15 ±0.3
Above 15 ~ 30 ±0.4
Above 30 ~ 50 ±0.5
Angle ±0.3°

3RD. ANGEL'S

UNITS MM

DRAWN BY: Jack Lu	DATE 04/15/19	MAT'L		TITLE	SWITCH
CHECKED BY: Jacky Chen	DATE 04/15/19	FINISH		MODLE	TACT SWITCH WITH LED 加CAP 帽蓋外殼鍍鉻黑 端子墊高負極點紅記號
APPROVED BY: Tony Kao	DATE 04/15/19	SCALE	1 : 1	DWG NO.	TS-H9A-1-C7-SC7-S313
		SHEET NO.	1 of 1	PART NO.	TS-H9A-1-C7-SC7-S313

SIZE A4 VER R